Getting Started: iP-8447/8847

By *ICP DAS CO., LTD., April 2002, All Rights Reserved*

ICP DAS CO., LTD. would like to congratulate you own your purchase of our ISaGRAF PACs - iP-8447/8847. The ease to integration of the controller system and the power of the IEC 61131-3 ISaGRAF software program combine to make a powerful, yet inexpensive industrial process control system.

ISaGRAF PAC Series of ICP DAS includes :

μPAC:	μPAC-7186EG, I-7188EG, I-7188XG,
iPAC:	iP-8447, iP-8847, I-8437-80, I-8837-80, I-8417, I-8817,
WinPAC:	WP-8147, WP-8447, WP-8847 (WinCon: W-8347, W-8747)
ViewPAC:	VP-2117, VP-2xW7

Legal Liability

ICP DAS CO., LTD. assumes no liability for any and all damages that may be incurred by the user as a consequence of this product. ICP DAS CO., LTD. reserves the right to change this manual at any time without notice.

ICP DAS CO., LTD. constantly strives to provide our customers with the most reliable and accurate information possible regarding our products. However, ICP DAS CO., LTD. assumes no responsibility for its use, or for any infringements of patents or other rights of third parties resulting from its use.

Trademark & Copyright Notice

The names of products are used for identification purposes only, and are the registered trademarks of their respective owners or companies.

Technical Service

Please contact local agent or email problem-report to service@icpdas.com .
New information can be found at www.icpdas.com.
Please visit www.icpdas.com ➔ FAQ ➔ Software ➔ ISaGRAF for Frequently Asked Questions.

Written by Chun Tsai, Spike Huang ; Edited by Janice Hong.
Copyright April 2002 – Dec. 2008, by ICP DAS CO., LTD. All Rights Reserved.

Table of Contents

Getting Started: iP-8447/8847 1
Legal Liability 1
Trademark & Copyright Notice 1
Technical Service 1
Table of Contents 2
Reference Guide 4
Performance Comparison Table 1 of ISaGRAF PACs 5
Performance Comparison Table 2 6
Specifications: iP-8447/8847 8
Chapter 1 Typical Application 1-1
1.1 iPAC-8x47 is better than I-8x37-80 1-1
1.2 Multi-HMI & Local/Remote I/O 1-2
1.3 Redundant Bus7000 1-2
1.4 Data Exchange through Ethernet & RS-485 1-3
1.5 Active Control Data and I/O Acquisition Data Reporting System 1-3
1.6 Wireless I/O Solution 1-4
1.7 Modbus Converter of I-7000 & I-87K I/O 1-4
1.8 Motion Control 1-5
1.9 SMS: Short Message Service 1-5
1.10 Modbus Master 1-6
1.11 Download & Monitoring Via Modem_Link 1-7
1.12 Send Email with One Attached File 1-7
1.13 Constructions Monitoring Application (VW Sensor) 1-8
1.14 Integrate with CAN/CANopen Devices and Sensors 1-8
1.15 Fast FRnet Remote I/O 1-9
1.16 ZigBee Wireless Solution 1-10
1.17 GPS Applications: ISaGRAF PAC plus I-87211W 1-11
Chapter 2 Software Programming 2-1
2.1 Step 1 - Installing the ISaGRAF Software 2-1
2.2 Step 2 - Installing the ICP DAS Utilities for ISaGRAF 2-4
2.3 Step 3 - Writing a Simple ISaGRAF Program 2-5
2.3.1 Open ISaGRAF-Project Management 2-6
2.3.2 Creating An ISaGRAF User's Group 2-6
2.3.3 Creating a New ISaGRAF Project 2-7
2.3.4 Declaring the ISaGRAF Project Variables 2-8
2.3.5 Create and Edit the ST - "ST1" Program 2-11
2.3.6 Create the LD - "LD1" Program 2-13
2.3.7 Edit the "LD1" Program 2-14
2.3.8 Connecting the I/O 2-19
2.4 Step 4 - Compiling & Simulating the Example Project 2-21
2.4.1 Compiling the LD Project 2-22
2.4.2 Simulating the LD Project 2-22

2.4.3 Running the Simulation Program 2-23
2.5 Step 5 - Download & Debugging the Example Project 2-25
2.5.1 Downloading the Project 2-26
2.5.2 Running the Example Program 2-28
2.6 Demo Programs List 2-30
2.6.1 iP-8447/8847 Demo Program List: 2-30
2.6.2 VB .NET 2005 and VB 6.0 Modbus TCP/IP Protocol Demo Program 2-33
2.6.3 ISaGRAF Demo Example Files 2-33
Chapter 3 Hardware System & Setting 3-1
3.1 Setting the NET-ID for the iP-8447/8847 3-1
3.2 Connecting PC to the iP-8447/8847's COM1 3-2
3.3 Connecting PC to iP-8447/8847's COM2 3-3
3.4 Connecting PC to Several iP-8447/8847's COM2 3-3
3.5 Setup COM Port's Baud rate & Non- Modbus Slave Port from Controller 3-4
3.6 Deleting an ISaGRAF Project from the Controller 3-6
3.7 Connecting PC to the iP-8447/8847 Ethernet Port 3-6
3.8 Modbus Slave Connection to the iP-8447/8847 3-8
3.9 Setting iP-8447/8847's IP & MASK & Gateway 3-9
3.10 Setting COM1 as None-Modbus-Slave Port 3-11
3.11 Update iP-8447/8847's Hardware Driver 3-12
3.12 Backup & Restore an ISaGRAF Project 3-14
3.13 Pin assignment Of the Fbus 3-16
3.14 Setting I-7000 and I-87K Remote I/O by DCON Utility 3-16
3.15 Linking I-7000 and I-87K Modules for Remote I/O 3-20
3.16 Creating a Modbus Link with the Controller 3-21
3.17 Linking To an MMI Interface Device 3-22
3.18 Using N-Port COM 3-23
3.19 Pin Assignment of Communication Ports 3-24
3.20 Dimension 3-25
Chapter 4 Frequently Asked Questions 4-1
4.1 English ISaGRAF Ver.3 FAQ 4-1
4.2 How to Detect the Status of "Hot Swap" for I-87K 4-6
4.3 How to Detect the Status of Dual Battery 4-7
Appendix 1
A : 10-ch Thermocouple Input Module 1
A.1 : I-7018Z 1
A.2 : I-87018Z 1
A.3 : Advantages 1
B : RU-87P1/2/4/8 2
Introduction 2
Features 3

Reference Guide

ISaGRAF Web Information:

http://www.icpdas.com/products/PAC/i-8000/isagraf.htm or
www.icpdas.com > Products > Software > ISaGRAF

ISaGRAF User's Manual:

CD-ROM: \napdos\isagraf\8000\english_manu\ user_manual_i_8xx7.pdf
http://www.icpdas.com/products/PAC/i-8000/getting_started_manual.htm

ISaGRAF (Chinese) User's Manual:

CD-ROM: \napdos\isagraf\8000\chinese_manu\chinese_user_manual_i_8xx7.pdf
http://www.icpdas.com/products/PAC/i-8000/getting_started_manual.htm

Hardware Manual:

Please refer to CD-ROM: \NAPDOS\8000\ 8000manual.pdf.
ftp://ftp.icpdas.com.tw/pub/cd/8000cd/napdos/8000/

Resource on the Internet:

Newly updated ISaGRAF IO libraries, drivers and manuals can be found at
http://www.icpdas.com/products/PAC/i-8000/isagraf.htm

Related Products:

- Industrial Ethernet Switch: NS-205/NS-208
  http://www.icpdas.com > Products > Industrial Ethernet Switch > Unmanaged Industrial Ethernet Switch

- RS-232 to RS-422/485 Converter : I-7520R
  http://www.icpdas.com > Products > Industrial Communcation > Converter & Repeater

- Power Supply : DP-665/660, KA-52F
  http://www.icpdas.com > Products > Accessories > Power_Supply

- High profile I-8K/87K Series I/O Modules
  http://www.icpdas.com/products/PAC/i-8000/io_support_list.htm

FAQ:

Please visit www.icpdas.com ➔ FAQ ➔ Software ➔ ISaGRAF for Frequently Asked Question, or visit http://www.icpdas.com/faq/isagraf.htm

Note: iPAC-8x47= iP-8447/8847

Performance Comparison Table 1 of ISaGRAF PACs

PACs	CPU	Normal running Speed (Normal PLC scan-time)	Normal Speed for floating point calculation (scan-time)	Ethernet	ISaGRAF code size limitation (bytes)	Memory for running program (bytes)
WP-8147 **WP-8447** **WP-8847**	PXA270 **520** MHz or compatible	About **10~30** (3~15 ms)	About **10~30** (3~15 ms)	**2** ports **10/100** Mbps	**1 MB**	About **20~40 MB**
W-8347 **W-8747**	Strong-ARM **206** MHz or compatible	About **10~20** (3~15 ms)	About **10~20** (3~15 ms)	**2** ports **10/100** Mbps	**1 MB**	About **20~40 MB**
W-8337 **W-8737**	Strong-ARM, 206 MHz or compatible	About 10~20 (3 ~15 ms)	About 10~20 (3 ~15 ms)	**1 port** **10 Mbps**	**1 MB**	About 20~40 MB
iP-8447 **iP-8847**	80186, **80** MHz or compatible	About **4** (2~25 ms)	About **0.8** (10~125 ms)	**2** ports **10/100** Mbps	64 KB	About **768 KB**
I-8437-80 **I-8837-80**	80186 **80** MHz or compatible	About **4** (2~25 ms)	About **0.8** (10~125 ms)	1 port 10 Mbps	64 KB	About 512 KB
I-8437 **I-8837**	80188 40 MHz or compatible	About 1 (5~100 ms)	About **0.2** (25~500 ms)	1 port 10 Mbps	64 KB	About 512 KB
I-8417 **I-8817**	80188 40 MHz or compatible	About 1 (5~100 ms)	About **0.2** (25~500 ms)	No	64 KB	About 512 KB
µPAC-7186EG	80186 **80** MHz or compatible	About **4** (2~5 ms)	About **0.8** (10~125 ms)	1 port **10/100** Mbps	64 KB	About **640 KB**
I-7188EG	80188 40 MHz or compatible	About 1 (5~100 ms)	About **0.2** (25~500 ms)	1 port 10 Mbps	64 KB	About 512 KB
I-7188XG	80188 40 MHz or compatible	About 1 (5~100 ms)	About **0.2** (25~500 ms)	No	64 KB	About 512 KB

Note: I-8x37/W-8x37 has phased out. Please select compatible iP-8x47/WP-8x47.
W-8x47 will be phased out by the end of Feb. 2009.

Performance Comparison Table 2

PACs	µPAC			iPAC			WinCon	WinPAC
	I-7188 XG	I-7188 EG	µPAC-7186EG	I-8417/ I-8817	I-8x37/ I-8x37 -80 *1	iP-8447 iP-8847 *2	W-8x47 W-8x37 *1	WP-8147 WP-8447 WP-8847 *2
Support Ethernet I/O (I-8KE4-MTCP I-8KE8-MTCP)	NO			NO			Yes	
Send E-mail (file attached)	NO		Yes *3	NO		Yes	Yes	
Max. amount for linking I-7K/87K Remote I/O module **(Only 1 port)**	64						255 (COM3)	255 (COM2, 3)
	(COM2, 3)			(COM3, 4)		(COM 2, 3, 4)		
Modbus Master Function Block Max. amount	64 (total)		128 (total)	64 (total)		128 (total)	256 (per port)	
Available Modbus Master COM Port (Max. mount)*4	(2 ports)						(10 ports)	
	COM 2, 3	COM 1, 2, 3		COM 1, 3, 4, 5		COM 1~5	COM 2, 3, 5~14	COM 1~14
Available Modbus Slave COM Port (Max. mount) *4	(2 ports)						(5 ports)	
	COM1 or 2/3			COM 1, 2	COM 1, 3	COM 1 or 2/3	COM 2 or 3, 5~8	COM 1, 2/3, 4~8
Modbus TCP/IP Connections	0	4	6	0	4	6	32 *5	
Modbus Address Range	1~4095			1~4095			1~8191	
Data Exchange	Fbus	Fbus, Ebus		Fbus	Fbus, Ebus		Ebus	
Support FRnet I/O	No			No		Yes *6	Yes *6	
Support CAN/CANopen	No		Yes*7	No		Yes *7	Yes *7	
Support VW Sensor	No			Yes			Yes	
Support Redundant Ethernet Port	No			No		Yes *8	Yes *8	
Support Mbus24r & mbus24r1 Function Block	No		Yes	No		Yes	Yes	
Support Mbus_xr & Mbus_xr1	No			No			Yes *9	
Support New Redundant System	No			No			Yes *10	

Annotations:

*1. I-8x37/I-8x37-80 represents the products of I-8437/8837/8437-80/8837-80.
W-8x47 represents the products of W-8347/W-8747.
W-8x37 represents the products of W-8337/W-8737.

*2. iP-8447/iP-8847 will be abbreviated as iP-8x47.
WP-8147/WP-8447/WP-8847 will be abbreviated as WP-8x47.

*3. μPAC-7186EG has to use an extra X607/608 battery backup SRAM expansion card for sending E-mail with an attached file, or it can only send E-mail without attached file.

*4. I-8000's COM5 ~ 20 & W-8x47/8x37's COM5 ~ 14 resides at the I-8112/8114/8142/8144/8142i expansion modules ;

iP-8x47's COM5 ~ 20 resides at the I-8112iW/14W/14iW/42iW/44iW expansion modules;

WP-8x47's COM5 ~ 14 resides at the I-8112iW/14W/14iW/42iW/44iW expansion modules;

I-7188/μPAC-7186's COM3 ~ 8 resides at the X5xx X-board expansion boards.

*5. The W-8xx7 with driver version 4.02 or older version only supports 8 Modbus TCP/IP connections, while supports up to 32 Modbus TCP/IP connections since the version 4.03.

If the controller is W-8347/8747 (two Ethernet ports), its OS image must update to the version released on July, 1, 2008 to ensure the network communications is correct.

Please refer to www.icpdas.com > FAQ > Software > ISaGRAF > 095 for more information.

*6. iP-8x47 support Max. **4** pcs. of I-8172W (Max ch. 1024 D/I and 1024 D/O).
W-8x47/8x37 support Max. **7** pcs. of I-8172W (Max ch.1792 D/I and 1792 D/O).
WP-8x47 support Max. **8** pcs. of I-8172W (Max ch.2048 D/I and 2048 D/O).

*7. μPAC-7186EG, iP-8x47, WP-8x47 and W-8xx7 supports the I-7530 (RS-232 to CAN converter) to connect to other CAN/CANopen devices.

*8. If the cable of one Ethernet port is broken or damaged, the PC/HMI can communicate with the other Ethernet port by Modbus TCP/IP protocol.

*9. The Mbus_xr and Mbus_xr1 can read max. 120 words or 60 long integers or 60 real values. Please refer to www.icpdas.com > FAQ > Software > ISaGRAF > FAQ-101 for more information.

*10. Only the WP-8x47 and W-8x47 support new redundant system, the W-8x37 doesn't support it.

Specifications: iP-8447/8847

■ Power Supply	
Power Input	10 ~ 30 VDC, 20 W (when I/O slots are empty)
Isolated	1 kV
Redundant Power Inputs	Yes, with one power relay (1 A @ 24 VDC) for alarm
Capacity	iP-8447: 0.85 A, 5 V supply to CPU, 5.51 A, 5 V supply to I/O expansion slots, total 30 W iP-8847: 0.9 A, 5 V supply to CPU, 5.1 A, 5 V supply to I/O expansion slots, total 30 W
Consumption	iP-8447: 6.7 W (0.28 A @ 24 V); iP-8847: 7.2 W (0.3 A @ 24 V)
■ General Environment	
Temperature	Operating: -25 ~ +75 °C Storage : -30 ~ +85 °C
Humidity	5 ~ 95 % RH (non-condensing)
■ System	
CPU	80186 (80 MHz and 16-bit) or compatible
Watchdog Timer	Yes, Default=0.8s
RTC (Real Time Clock)	Gives seconds, minutes, hours, day of month, day of week, month & year, valid up from 1980 to 2079
SRAM	**768** KB
Dual Battery Backup SRAM	512 KB (for 5 years data retention), support up to 1024 retain variables
Flash	512 KB (100,000 erase/write cycles) with Flash protection switch
NVRAM	31 bytes (battery backup, data valid up to 5 year)
EEPROM	16 KB (data retention > 40 years ; 1,000,000 erase/write cycles)
Serial Number	64-bit hardware serial (The user can add a check mechanism to protect program);
SMMI	Five Digits. 7-Seg. LED, three Programmable LED Indicators, four push buttons on the front panel. It can display message, value, input value, simulate input & output.
NET ID	8-pin DIP switch to set NET ID as 1 ~ 255
■ I/O Expansion Slots	
Slots Number	4 empty slots for iP-8447, 8 empty slots for iP-8847. Note : iP-8447/8847 only accept high profile parallel (I-8K) & serial (I-87K) I/O boards.
Hot Swap	Support Hot-swap I-87K high profile I/O modules on the slot 0 ~ 7 if the module needs to be replaced.
■ Serial Ports	
Ethernet	10/100 Mbps x 2, program download port.
COM1	RS-232: TxD, RxD, GND, Speed: 115200 bps max. Program downloads port.
COM2	RS-485: D+, D- ; Speed: 115200 bps max.

	3000 VDC isolated.
COM3	RS-232/RS-485, RS-232:TxD,RxD,GND,CTS,RTS ; RS-485:DATA+,DATA-, Speed: 115200 bps max. Program downloads port.
COM4	RS-232: CD, RxD, TxD, DTR, GND, DSR, RTS, CTS, RI. Speed: 115200 bps max. Full Modem signals
■ Development Software	
ISaGRAF Version 3	IEC 61131-3 standard. Languages: LD, ST, FBD, SFC, IL & FC
Max. Code Size	Accepts max. 64 KB ISaGRAF code size (Appli.x8m must < 64 KB)
■ Motion Control	
	iP-8447/8847 can integrate with one I-8091W (2-axis) or two I-8091W (4-axis) to do motion control. Ethernet communication is also available when doing motion control.
■ PWM Output	
High Speed PWM Module	I-8088W, 8-ch PWM outputs. 10 Hz ~ 500 kHz (non-continuous), duty: 0.1 ~ 99.9%
DO Module as PWM	8-ch max. for one controller. 500 Hz max. for Off=1 & On=1 ms Output square curve: Off: 1 ~ 32767 ms, On: 1 ~ 32767 ms Optional D/O boards: I-8037W, 8041W, 8041AW, 8042W, 8050W, 8054W, 8055W, 8056W, 8057W, 8060W, 8063W, 8064W, 8068W, 8069W (Relay Output boards can not generate fast square pulse)
■ Counters	
Parallel D/I Counter	8-ch max. for 1 controller. Counter Val: 32-bit. 500 Hz max. Min. ON & OFF width must >1ms Optional D/I boards: I-8040W, 8040PW, 8042W, 8048W, 8050W, 8051W, 8052W, 8053W, 8053PW, 8054W, 8055W, 8058W, 8063W.
Serial D/I Counter	Counter input: 100 Hz max. Counter value: 0 ~ 65535 (16-bit) Optional serial I-87K D/I boards: I-87040W, 87046W, 87051W, 87052W, 87053W, 87053W-A5, 87054W, 87055W, 87058W, 87059W, 87063W
Remote D/I Counter	All remote I-7000 & I-87K D/I modules support counters. 100Hz max. value: 0 ~ 65535
High Speed Counter	I-87082W: 500 kHz max. 32-bit, I-8084W: 450 kHz max. 32-bit
■ Protocols	
Modbus Master Protocol	Up to **2** COM Ports ; COM1 ~ (COM5 in multi serial port board) can support Modbus RTU Master or ASCII Master protocol to connect to other Modbus Slave devices, 2 ports support up to 128 Modbus_xxx function blocks (same type).
Modbus Slave Protocol	Up to 2 COM Ports, COM1 and one of (COM2, COM3) can support Modbus RTU Slave protocol for connecting ISaGRAF, PC/HMI/OPC Server & MMI panels.

Modbus TCP/IP Protocol	Two Ethernet Port support Modbus TCP/IP Slave protocol for connecting ISaGRAF & PC/HMI. (Max. 6 connections)
Remote I/O	One of COM2, 3, 4 supports I-7000 I/O modules & (I-87K base or RU-87P1/2/4/8) + I-87K High Profile I/O cards as Remote I/O. Max. 64 Remote I/O module for one controller
Fbus	Built-in COM3 Port to exchange data between ICP DAS's ISaGRAF PACs.
Ebus	To exchange data between ICP DAS's ISaGRAF Ethernet PACs via Ethernet Port. (The LAN2: upper port ONLY)
SMS: Short Message Service	One of COM4 or (COM5 in multi serial port board) can link to a GSM Modem to support SMS. User can request data/ control the controller by cellular phone. The controller can also send data & alarms to user's cellular phone. Optional GSM Modem: GTM-201-RS232 (850/900/1800/1900 GSM/GPRS External Modem) or visit to http://www.icpdas.com/products/GSM_GPRS/wireless/GSM_GPRS_modem.htm for recommended GSM/GPRS Modem
User Defined Protocol	User can write his own protocol applied at COM1 ~ COM4 (& COM5 ~ COM20 if multi-serial port boards are plugged) by serial communication function blocks.
Modem_Link	COM4 can connect a general Modem. Supports PC to remotely download & monitor the controller.
MMICON/LCD	One of COM3 or COM4 supports ICP DAS's MMICON. The MMICON is featured with a 240 x 64 dot LCD and a 4 x 4 Keyboard. User can use it to display picture, string, integer, float, and input a character, string, integer and float.
CAN/CANopen	Up to 3 COM Port. iP-8447/8847 can use its COM1, 3, 4 or (COM5 ~ COM12, resides at the I-8112iW/8114W/8114iW RS-232 expansion board) to connect one I-7530 (RS-232 to CAN converter) to support CAN/CANopen devices and sensors. One iP-8x47 supports max. 3 RS-232 Ports to connect max. 3 I-7530. Please refer to www.icpdas.com > FAQ > Software > ISaGRAF Ver.3 (English) > FAQ-086。
Redundant Bus7000	**Two** ISaGRAF PACs can link to remote I-7000 & I-87K High profile I/O modules at the same time. Only **one** controller is active to control these Remote I/Os. If one is dead, the other one will take over the control of Remote I/Os.
FRnet I/O	Support max. 4 I-8172W FRnet Master cards to connect FRnet I/O modules. (max. 1024-ch D/I + 1024-ch D/O)
Sending E-Mail	Actively or passively sending E-mail via Ethernet Port through internet. Max. 10 receivers for each sending and can send E-mail with an attached file (Max. file size is about 488 KB).

Chapter 1 Typical Application

1.1 iPAC-8x47 is better than I-8x37-80

iP-8447/8847 - the advanced I-8xx7 ISaGRAF based iPAC.

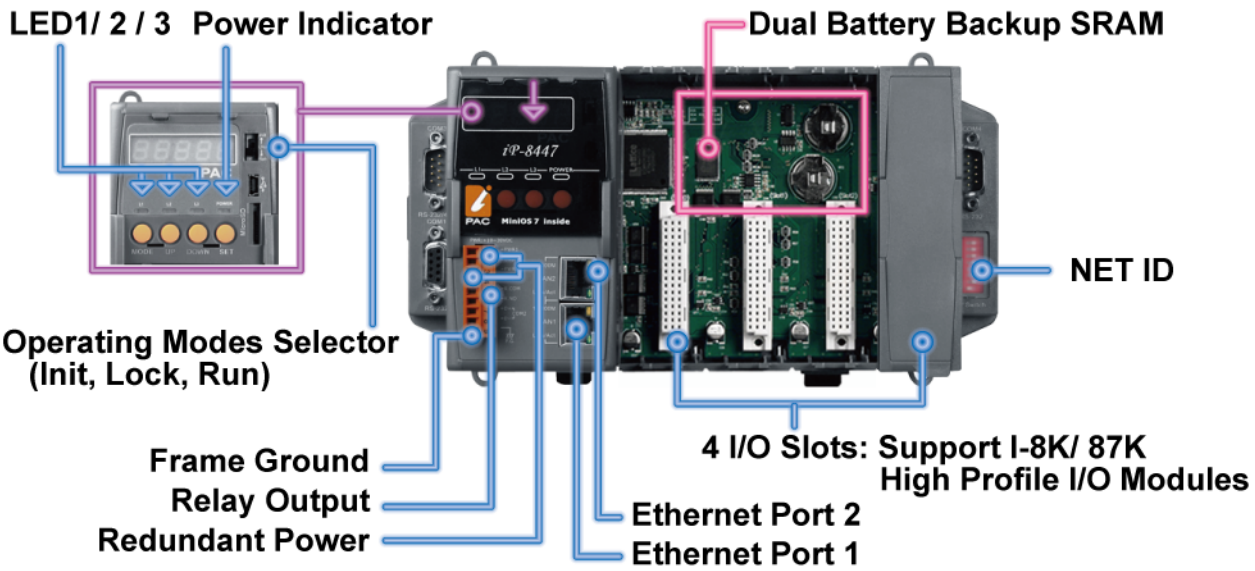

	iP-8x47	I-8x37-80
EEPROM	16 KB	2 KB
SRAM	768 KB	512 KB
Battery Backup SRAM	512 KB (Dual battery)	Need extra S256/512
COM2 (RS-485)	Yes	No
Ethernet	10/100 Mbps x 2	10 Mbps x 1
Modbus TCP/IP connection	Support two Ethernet Port, total max. 6 connections	Max. 4 connections
Support Hot-Swap	Yes	No
Support CAN/CANopen	Yes	No
Support send E-mail with attached file	Yes	No
Support FRnet I/O	Yes	No
Support Mbus24r and Mbus24r1 (Can read Max.24 word)	Yes	No

Note: iPAC-8x47 only support I-8K, I-87K (Hot-swap) High Profile I/O modules plugged on slot 0 ~ 7.

1.2 Multi-HMI & Local/Remote I/O

Users can choose RS-485 Remote I/O modules (I/7000, M-7000) or expansion units (RU-87Pn, I-87Kn) plugged with I-87K high profile I/O modules. With Modbus TCP/IP protocol, up to 6 PCs can link to one iP-8X47.

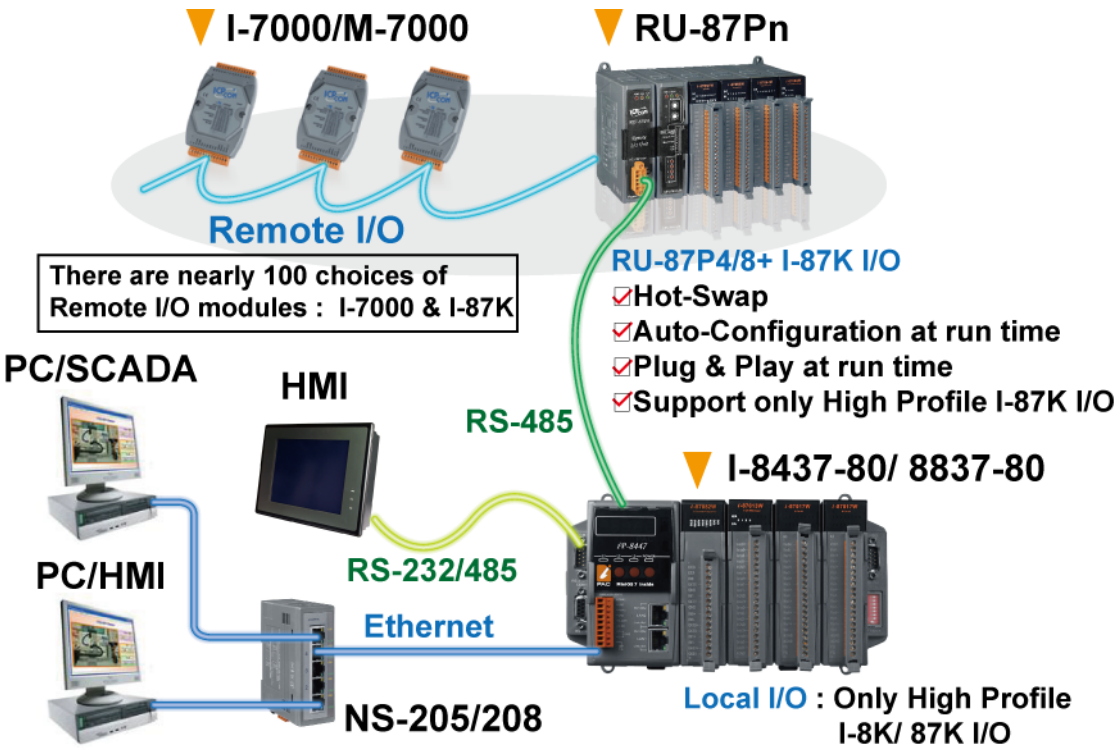

1.3 Redundant Bus7000

iP-8447/8847:

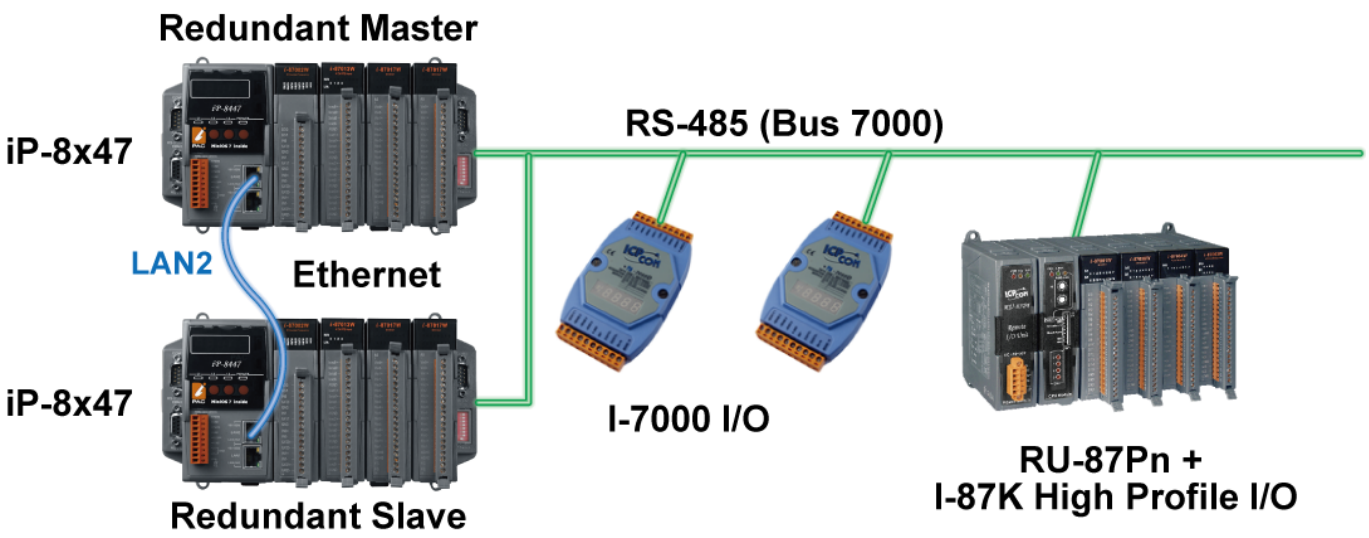

1.4 Data Exchange through Ethernet & RS-485

Controller to Controller Data Exchange

iP-8447 can support Ebus (Ethernet) and Fbus (RS-485)

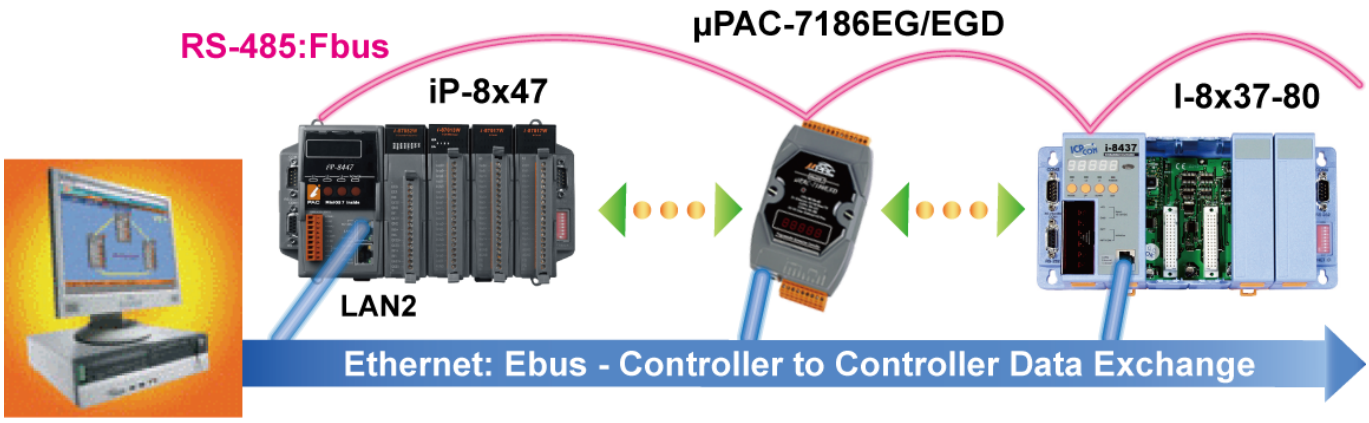

1.5 Active Control Data and I/O Acquisition Data Reporting System

For more information, please refer to www.icpdas.com > FAQ > Software > ISaGRAF Ver.3 (English) > FAQ-065

Stable and Cost-effective Data Acquisition Auto-Report System

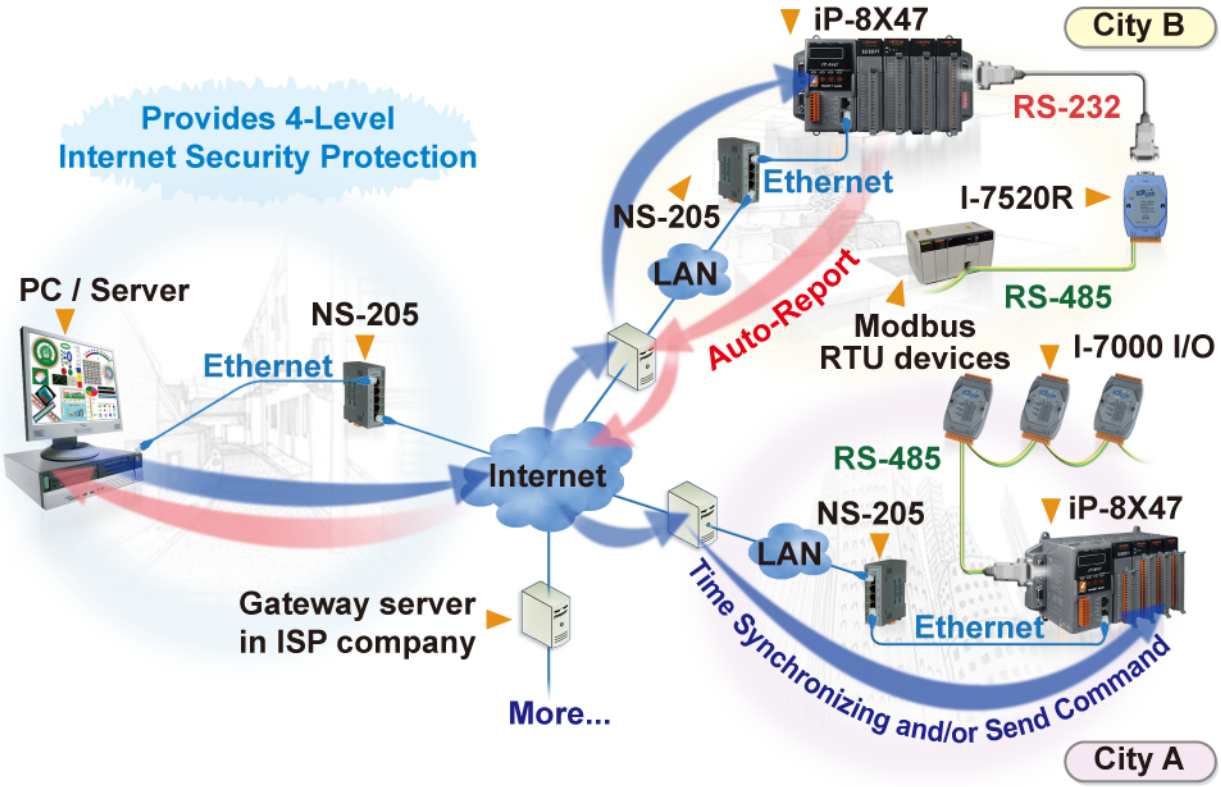

1.6 Wireless I/O Solution

User can use iP-8447/8847 with two or more SST-2450 wireless communication modules to data acquisition and control applications between a host and remote I/O modules.

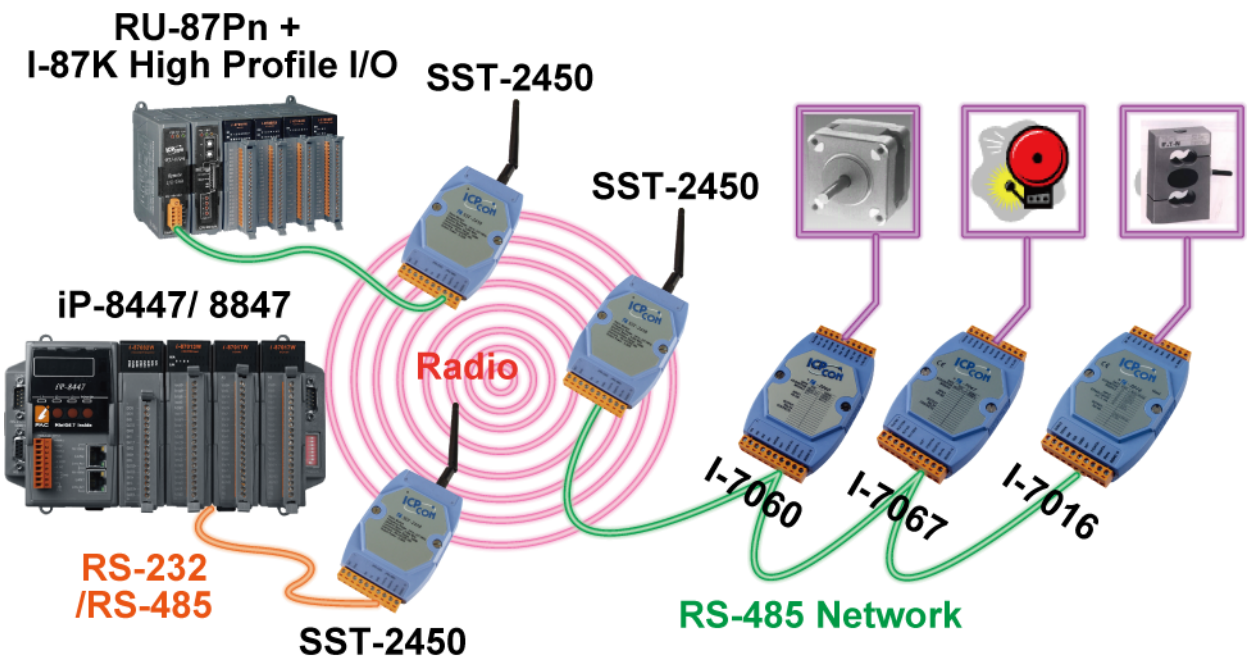

1.7 Modbus Converter of I-7000 & I-87K I/O

iP-8447/8847 can be a Modbus RTU serial & TCP/IP converter of I-7000 & I-87K Remote I/O modules.

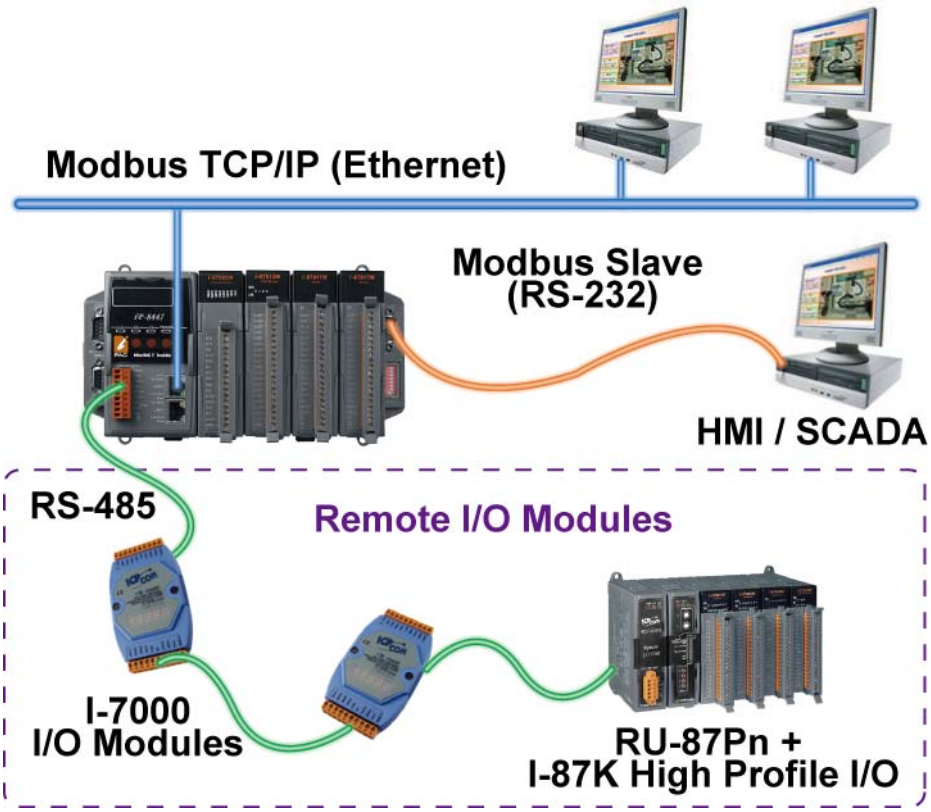

1.8 Motion Control

One I-8091W can control 2-axis: X-Y plane, or 2-axis independent
Two I-8091W can control 4-axis: X-Y plane + 2-axis independent or
4-axis independent

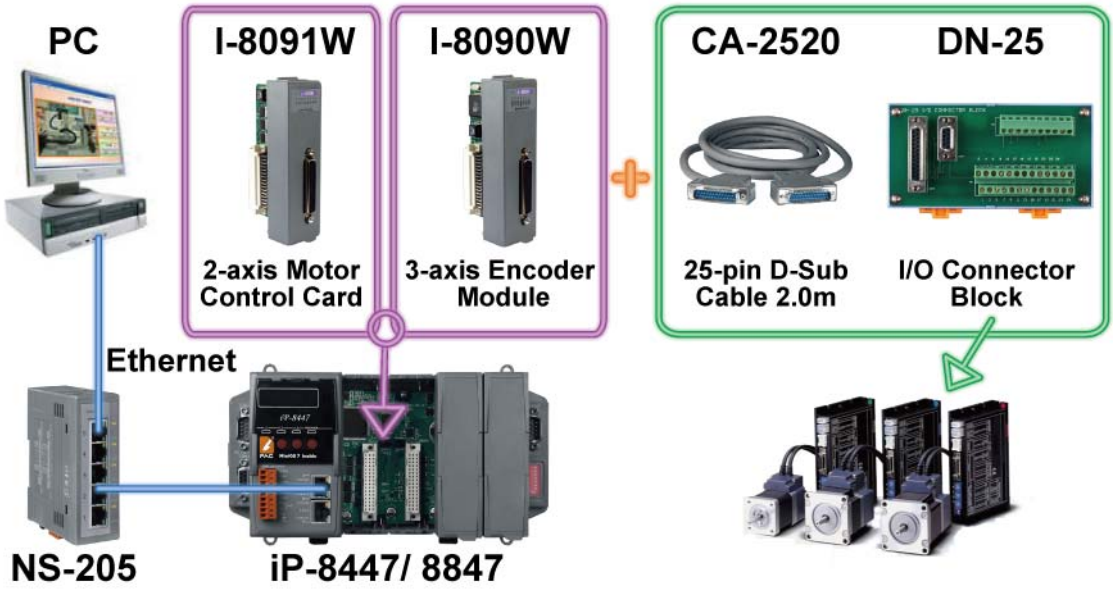

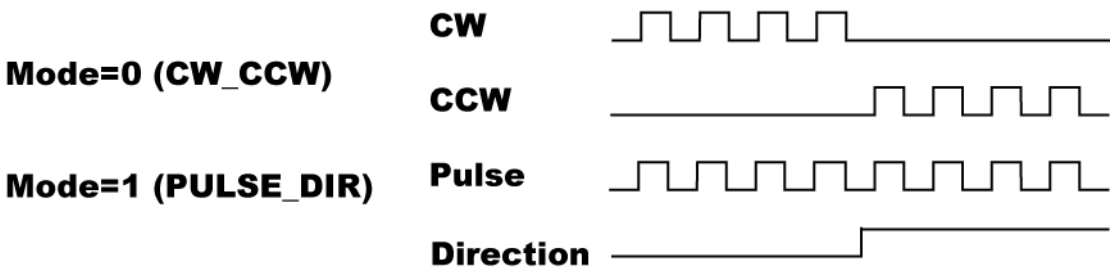

1.9 SMS: Short Message Service

iP-8x47 can integrate with a GSM Modem to SMS: Short Message Service. This allows user to request information or perform control tasks for the ISaGRAF PAC via his personal cellular phone. In addition, the PAC can also send information and alarms to user's cellular phone.

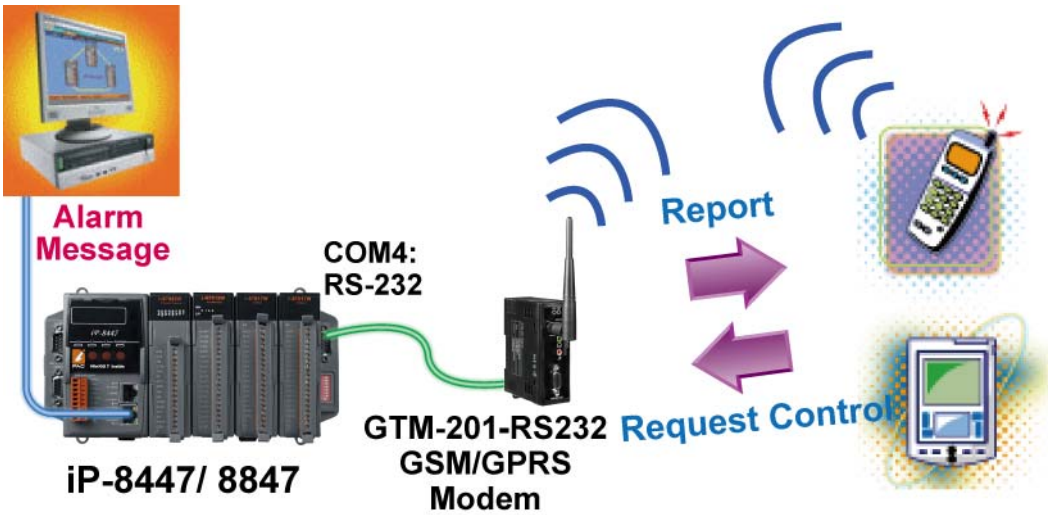

1.10 Modbus Master

Up to **2** COM Ports (COM1, COM2, COM3, COM4 and COM5 in multi serial port board) can support Modbus RTU Master or ASCII Master Protocol to connect to other Modbus Slave devices.

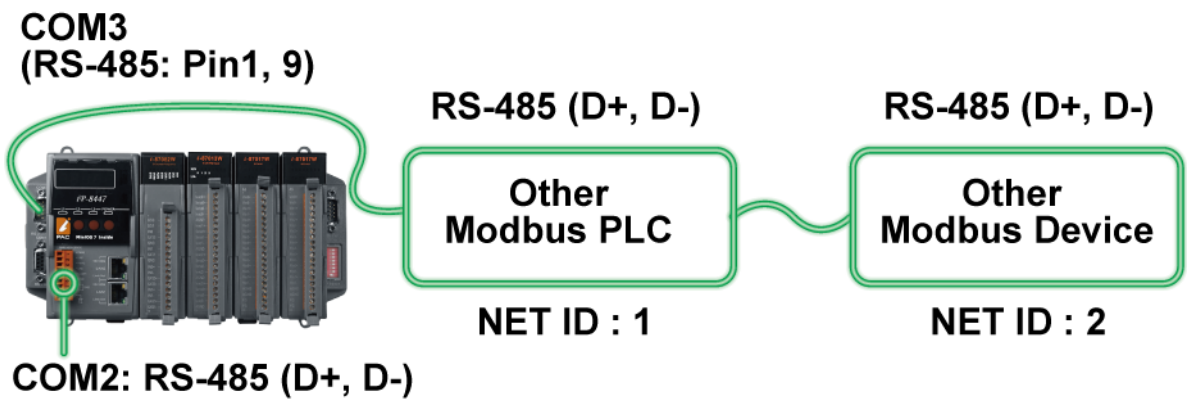

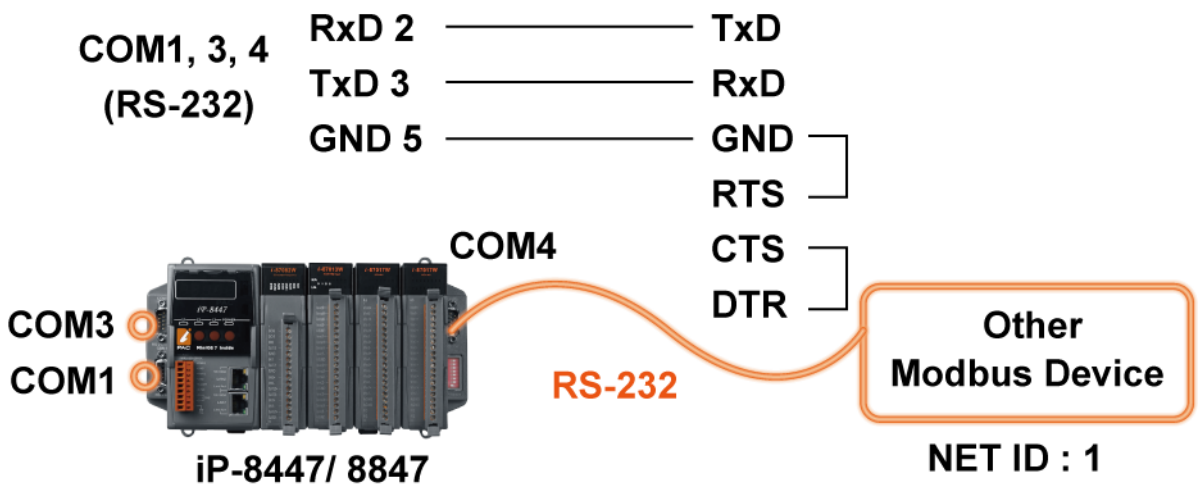

NOTE:

When the I-8112iW/8114W/8114iW/8142iW/8144iW expansion board plugged, COM5 ~ COM20 will be added.
http://www.icpdas.com/products/PAC/i-8000/8000_IO_modules.htm

1.11 Download & Monitoring Via Modem_Link

The Modem_Link provides you a easy way to remotely download your ISaGRAF program to the iP-8x47 via a general Modem. And also you can monitor every I/O, data and if the program allows, you can control it via the Modem.

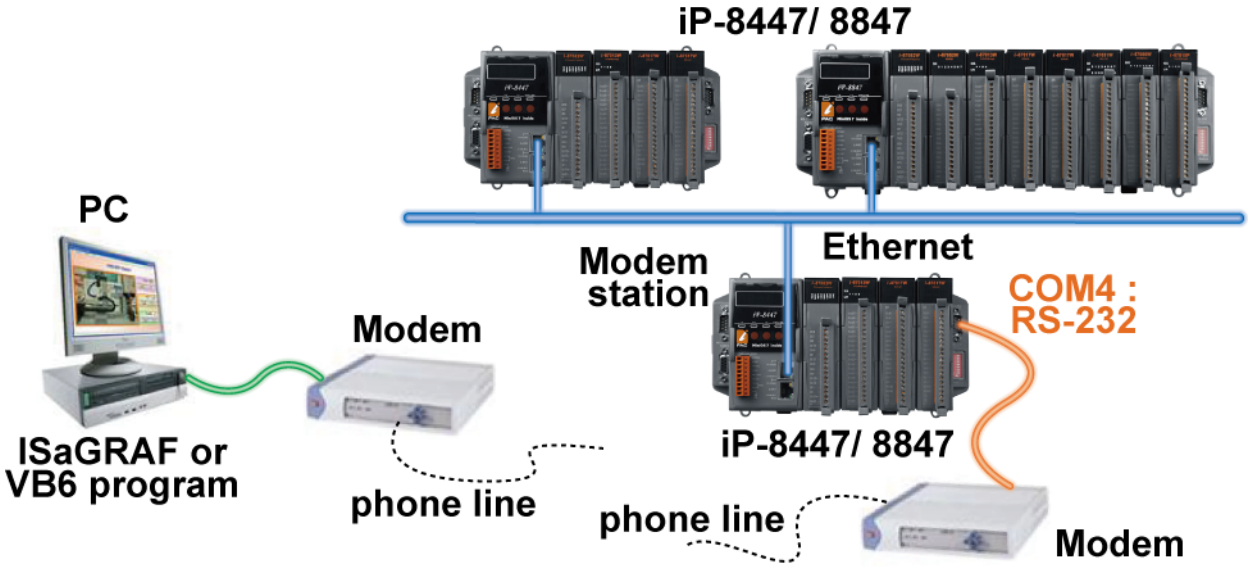

1.12 Send Email with One Attached File

For more information, please refer to www.icpdas.com > FAQ > Software > ISaGRAF Ver.3 (English) > FAQ-067

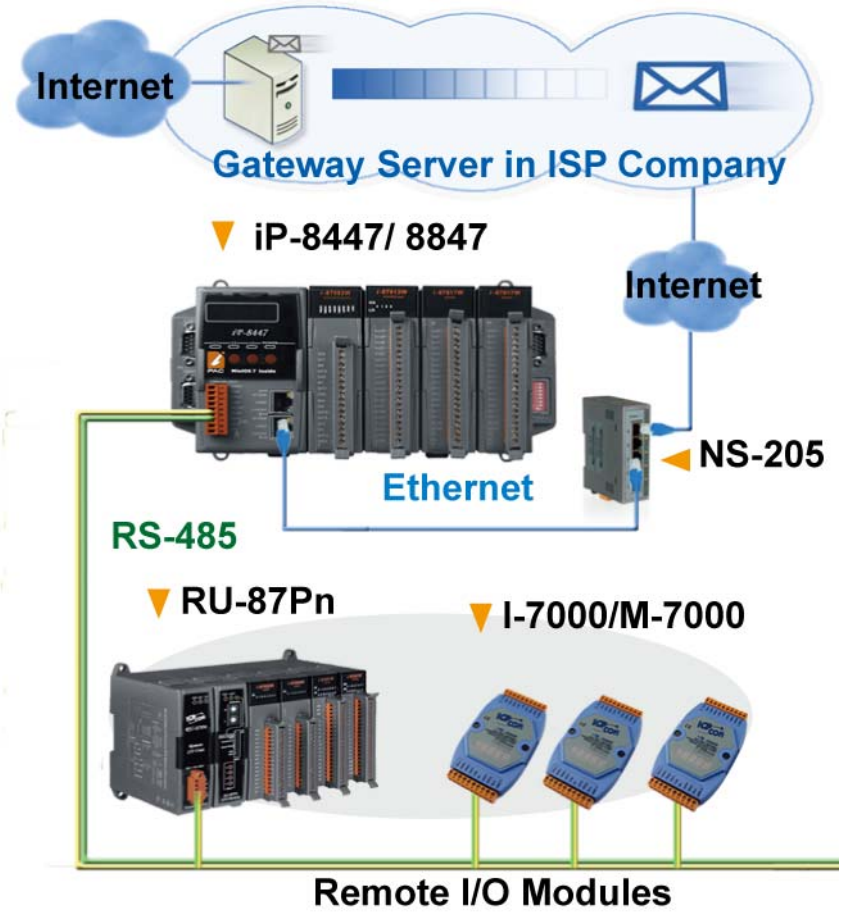

1.13 Constructions Monitoring Application (VW Sensor)

For more information, please refer to www.icpdas.com > FAQ > Software > ISaGRAF Ver.3 (English) > FAQ-091

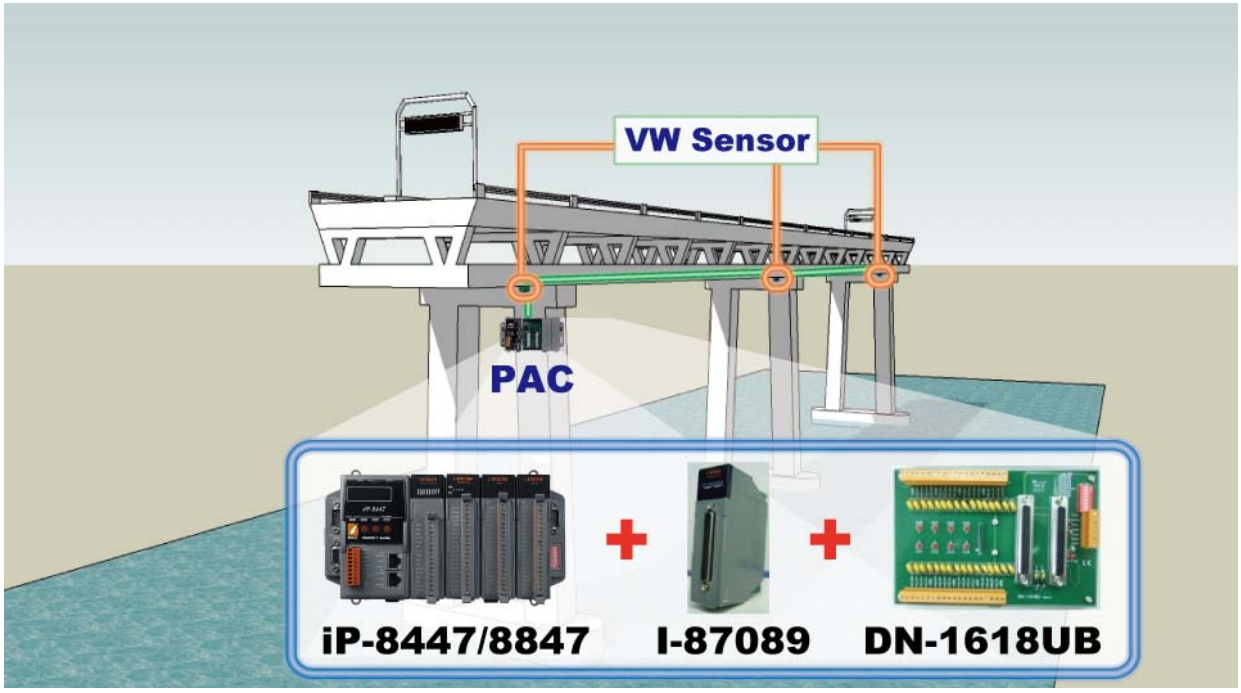

1.14 Integrate with CAN/CANopen Devices and Sensors

For more information, please refer to www.icpdas.com > FAQ > Software > ISaGRAF Ver.3 (English) > FAQ-086

,

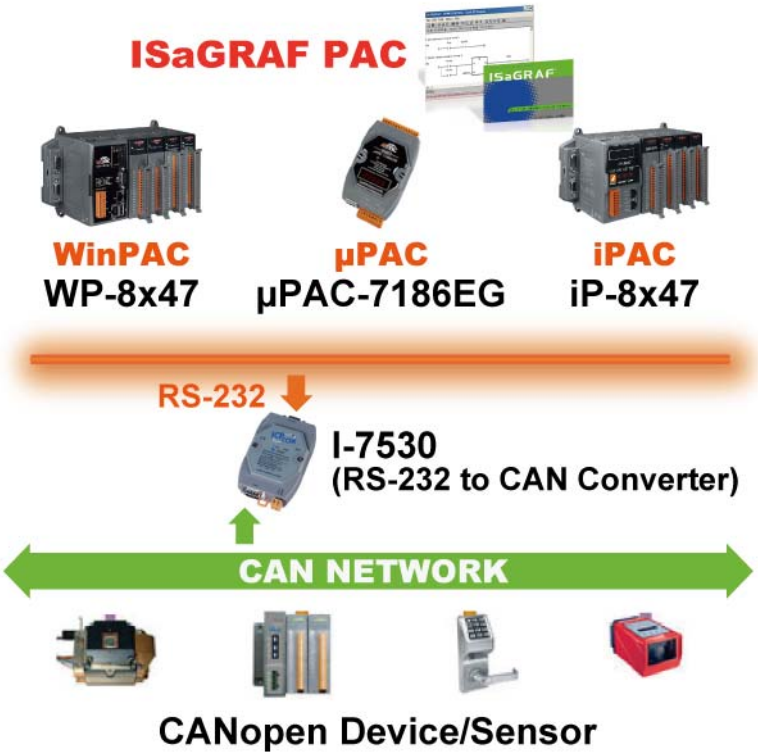

1.15 Fast FRnet Remote I/O

For more information, please refer to www.icpdas.com > FAQ > Software > ISaGRAF Ver.3 (English) > FAQ-082

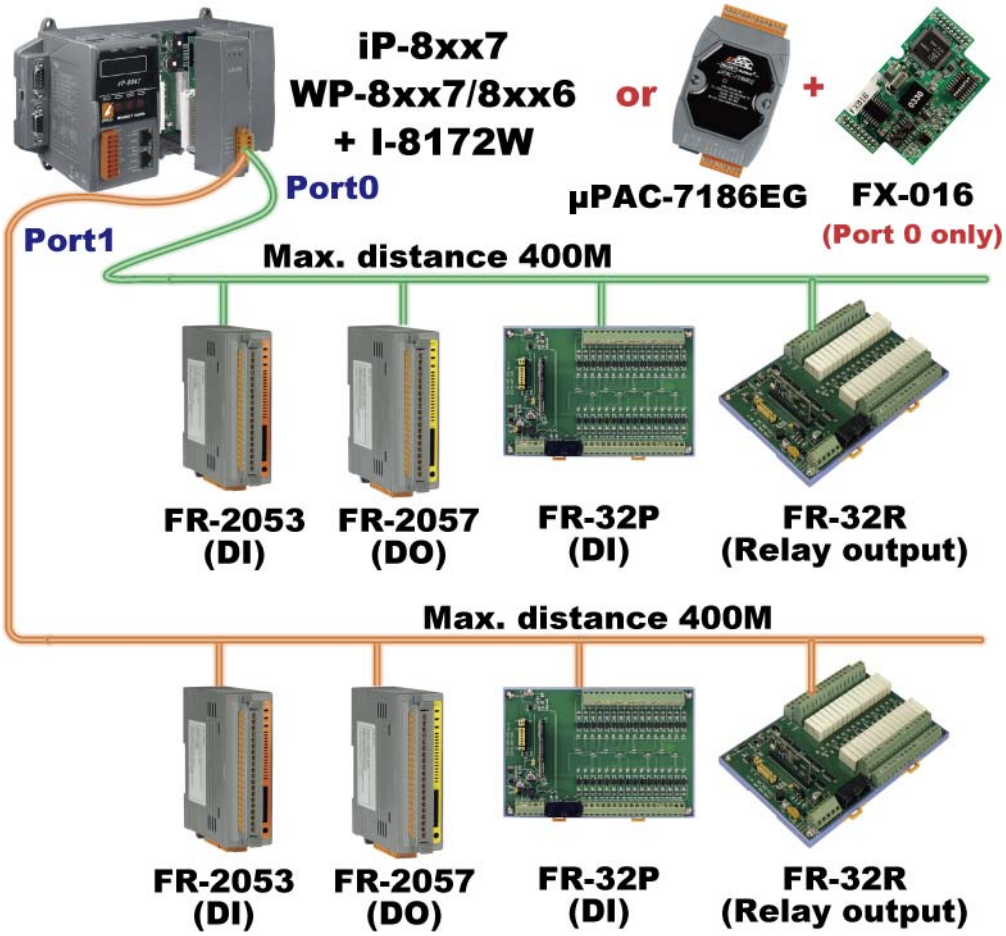

1.16 ZigBee Wireless Solution

The iP-8xx7 plus ZB-2550P and ZB-2551P RS-232/RS-485 Converters can apply wireless communication, reduce the wiring cost, and achieve the mission of remote I/O control and data acquisition.

For more information, please refer to www.icpdas.com > FAQ > Software > ISaGRAF Ver.3 (English) > FAQ-110

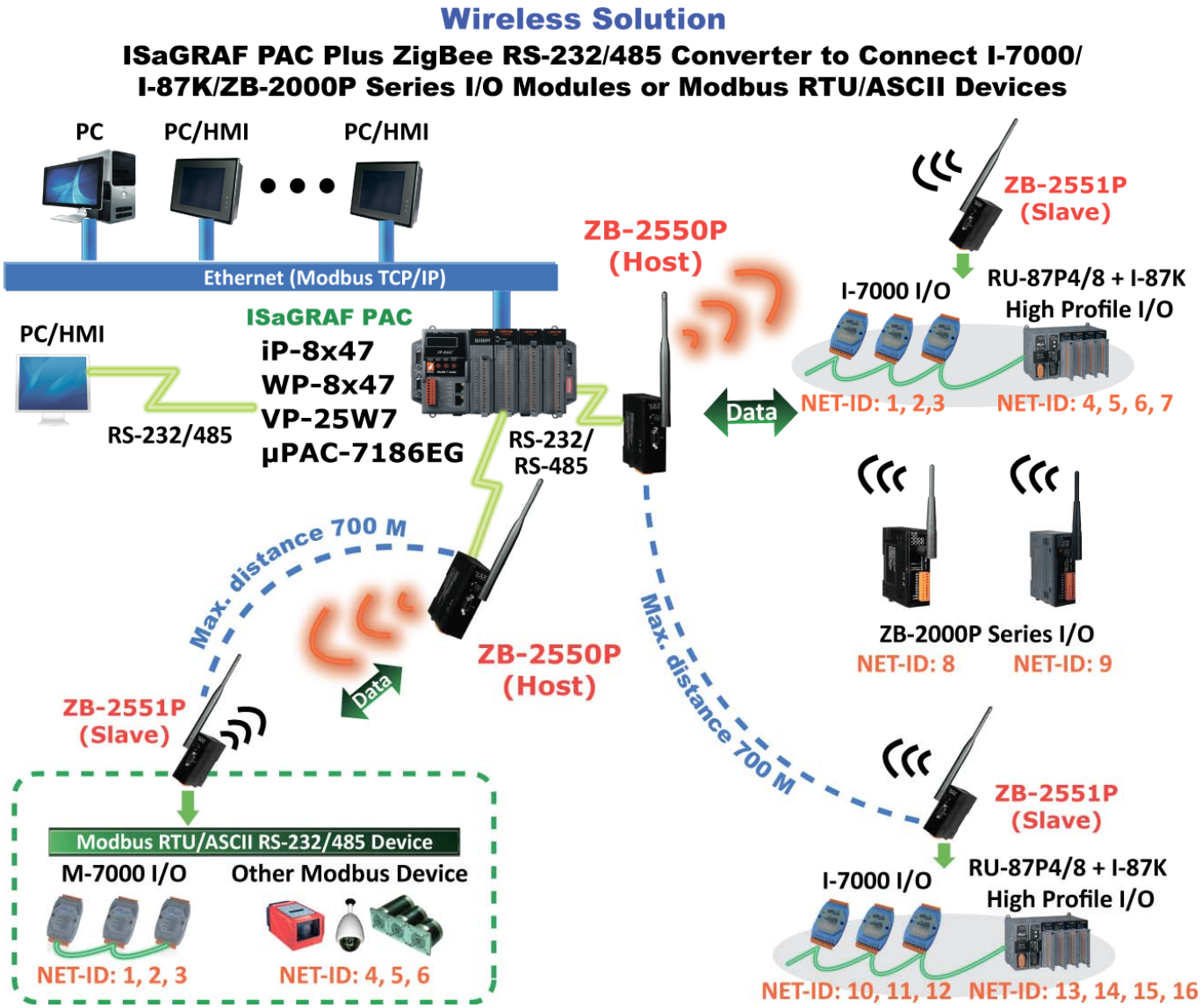

1.17 GPS Applications: ISaGRAF PAC plus I-87211W

The iP-8xx7 can support one I-87211W GPS I/O (plug in slot 0 ~ 7) to do auto-time-sychronization and getting local Longitude and Latitude.

For more information, please refer to www.icpdas.com > FAQ > Software > ISaGRAF Ver.3 (English) > FAQ-107

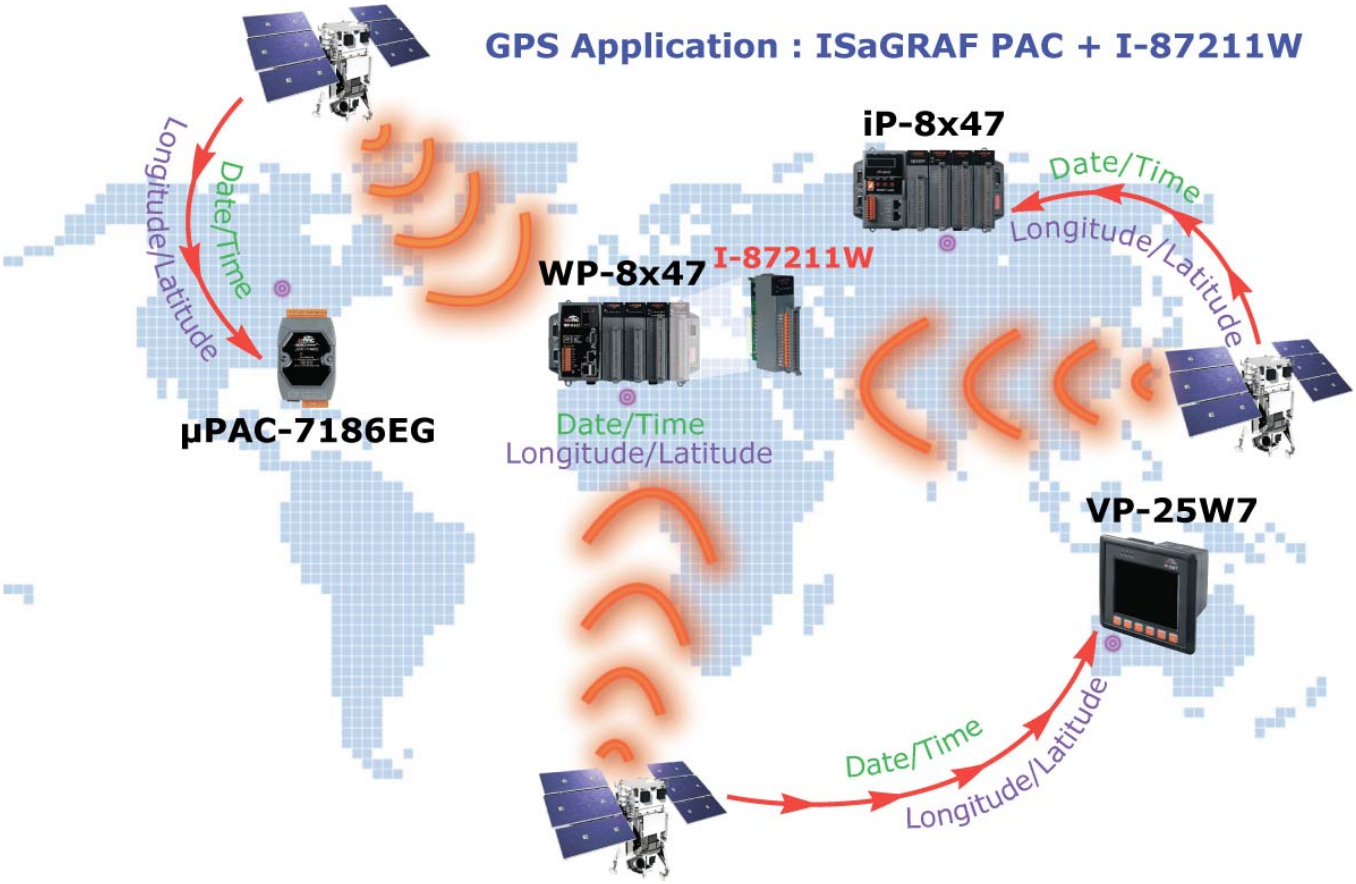

Chapter 2 Software Programming

Please refer to CD-ROM: \napdos\isagraf\8000\english_manu\ "user_manual_i_8xx7.pdf" for detailed ISaGRAF User's Manual.

2.1 Step 1 - Installing the ISaGRAF Software

The user has to install two kinds of software before he can program on the iP-8447/8847 controller system. They are

A. ISaGRAF Workbench
B. ICP DAS Utilities for ISaGRAF

User has to purchase at least one pcs. of ISaGRAF Workbench Version 3 (ISaGRAF-32, ISaGRAF-256) to install on his PC to edit, download, monitor & debug the controller system.

Item (B) is free and it is burned inside the CD-ROM which is delivered with the iP-8447/8847.

Operating system Requirements:

One of the following computer operating systems must be installed on the target computer system before you can install the ISaGRAF Workbench software program.

- **Windows 95/98**
- **Windows NT Version 3.51 or Windows NT Version 4.0**
- **Windows 2000 Or Windows XP**
  (Not yet ready for Vista)

Steps to Installing the ISaGRAF Workbench:

- Insert the ISaGRAF Workbench CD into your CD-ROM drive.
  (If your computer does not have the auto-start feature active, use the Windows Explorer and go to the CD-ROM drive where the Workbench CD is installed.)

- Double-click on the "install.bat" file listed on the ISaGRAF CD.
  (If the "install.bat" file is not found on your ISaGRAF CD, and then double-click on the "ISaGRAF.exe" file to start the installation process.)

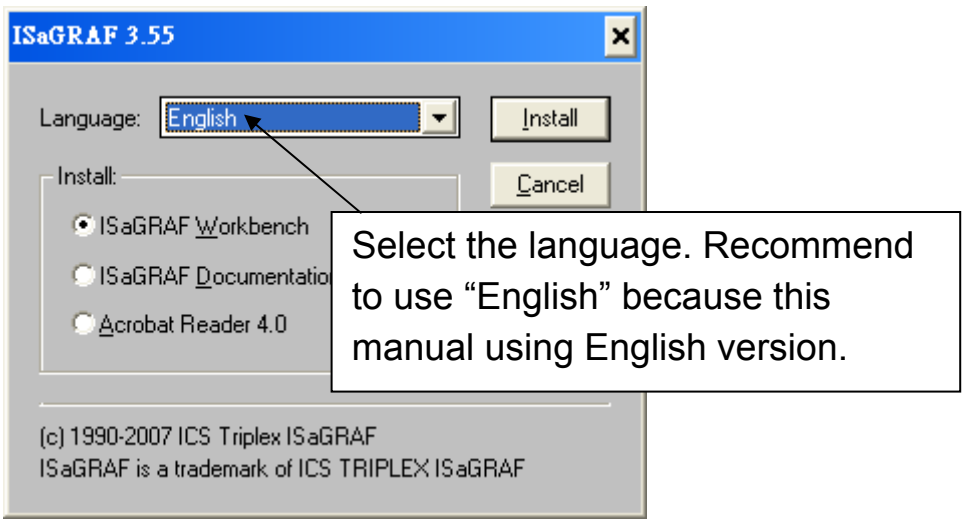

To begin the ISaGRAF 3.x software program, click on the Windows "Start" button, then on "Programs", and you should see the ISaGRAF program group as illustrated below. You could click "Projects" to start the program.

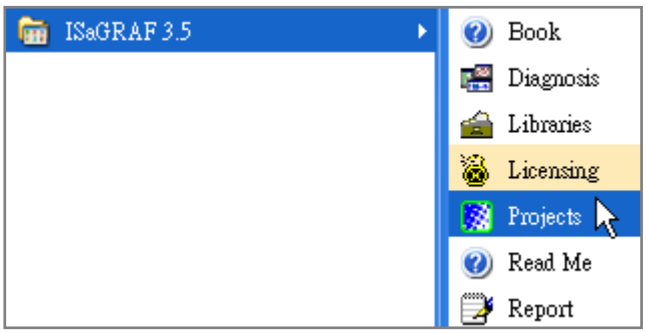

Note:
You must install the hardware protection device (dongle) provided with the ISaGRAF software on your computers parallel port to for the ISaGRAF program to achieve fully authorized functionality. While using ISaGRAF and the dongle is plugged well,

- **If the "Help" ➔ "About"** says <u>“Maximum number of IO variables: 32”,</u> it means ISaGRAF workbench cannot find the dongle well.
  ➔Please reset your PC and then check the “Help”➔“About” again.

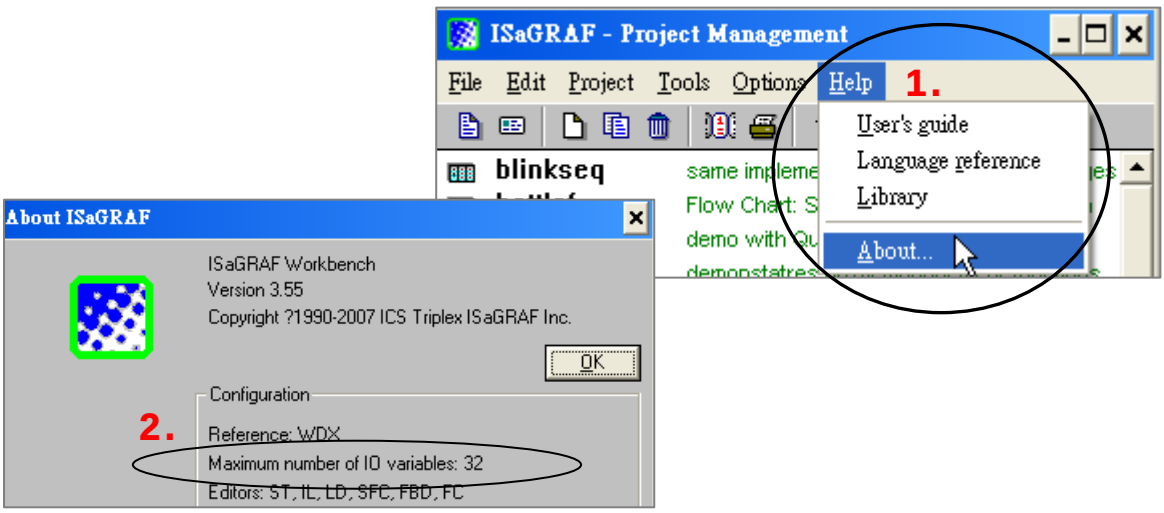

- If it still displays "Maximum number of IO variables: 32", the dongle driver may not be installed well.
  ➔Please execute the ISaGRAF CD_ROM: \Sentinel5382\setup.exe for ISaGRAF-80 or \Sentinel\setup.exe for other ISaGRAF version and then reset the PC again.

Note:
Since ISaGRAF 3.51, it is using USB protection-key, after you have installed the ISaGRAF, please un-plug the USB key from your USB Port first, then run "\Sentinel\SSD5411-32bit.exe" in the ISaGRAF 3.51 ~ 3.55 CD-ROM. Then please reset your PC. Afterwards, must plug the USB protection-key when you execute the ISaGRAF.

Important Notice for Window 2000 Users:

If you close some ISaGRAF windows, it holds about 20 to 40 seconds (No response). This may caused by the procedure "CTFMON.EXE" of Windows 2000. To avoid this problem, you may create a short cut for the "ISaGRAF project manager". And then check on "run in separate memory space" option in the shortcut property.

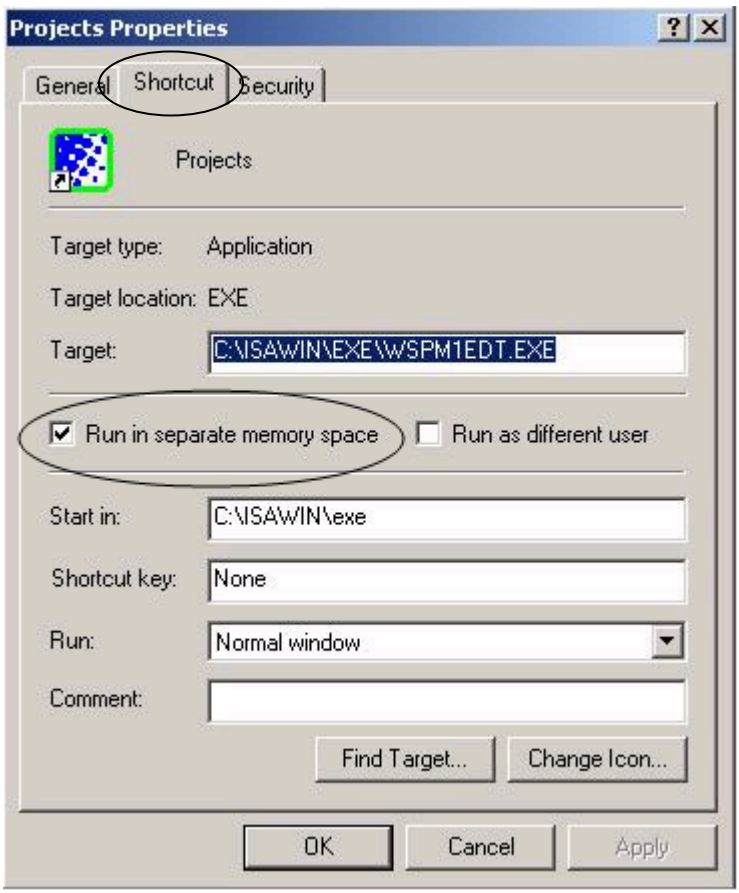

Important Notice for Window NT Users

If your computer is using the Windows NT operating system, you will need to add one line to the "isa.ini" file in the ISaGRAF Workbench "EXE" subdirectory.

C:\isawin\exe\isa.ini

You can use any ASCII based text editor (such as Notepad or UltraEdit32) to open the "isa.ini" file.

Locate the [WS001] header in the "isa.ini" initialization file (it should be at the top of the file). Anywhere within the [WS001] header portion of the "isa.ini" initialization file, add the entry shown below within the [WS001] header:

```
[WS001]
   NT=1
Isa=C: \ISAWIN
IsaExe=C: \ISAWIN\EXE
Group=Samples
IsaApl=c: \isawin\smp
IsaTmp=C: \ISAWIN\TMP
```

2.2 Step 2 - Installing the ICP DAS Utilities for ISaGRAF

The “ICP DAS Utilities for ISaGRAF” consists of 3 major items.

- I/O libraries of iP-8x47, I-8xx7, I-7188EG/XG, µPAC-7186, W-8xx7
- Modem_Link utility
- Auto-scan I/O utility

Note:

Make sure you have already installed the ISaGRAF Workbench program, IF NOT, please refer to Ch 2.1 Step 1 before continuing.

There is a CD-ROM supplied with each of the iP-8447/8847 controllers with the "ICP DAS Utilities for ISaGRAF". Please insert the CD-ROM into your CD-ROM drive. Then run CD-ROM: \napdos\isagraf\setup.exe. Follow the steps to install it.

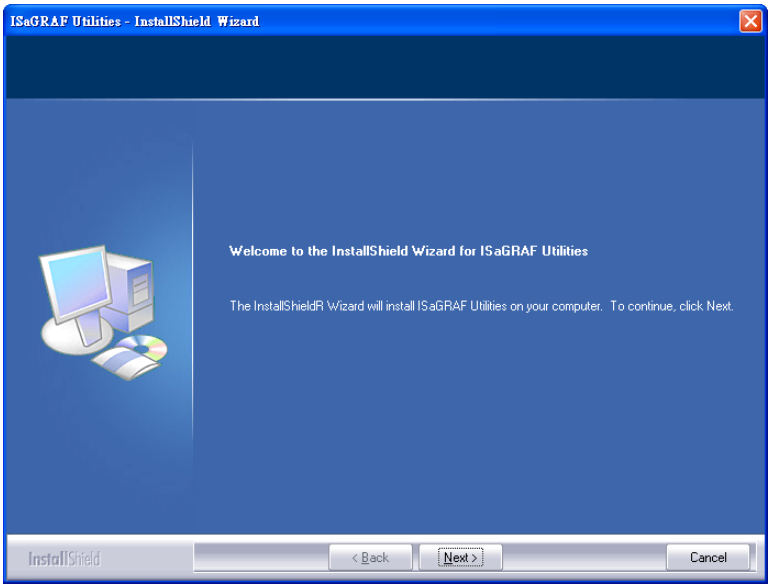

Note:

If “ICP DAS Utilities for ISaGRAF” is not in your CD-ROM, please refer to website of http://www.icpdas.com/products/PAC/i-8000/isagraf.htm or http://www.icpdas.com > Products > Software > ISaGRAF), then click "**Driver**" icon to download "**io_lib.zip**", please save the file in path C:\ to ensure the completed access.

2.3 Step 3 - Writing a Simple ISaGRAF Program

We are going to use ISaGRAF to write a simple ISaGRAF example program and then download it to the iP-8447/8847 controller to make it work.

If you haven’t installed "ISaGRAF" & "ICP DAS Utilities for ISaGRAF", please go back to 2.1:Step 1 & 2.2:Step 2.

This example contains 2 programs. One is written in **Structured Text (ST)** and one in **Ladder Logic (LD)** language.

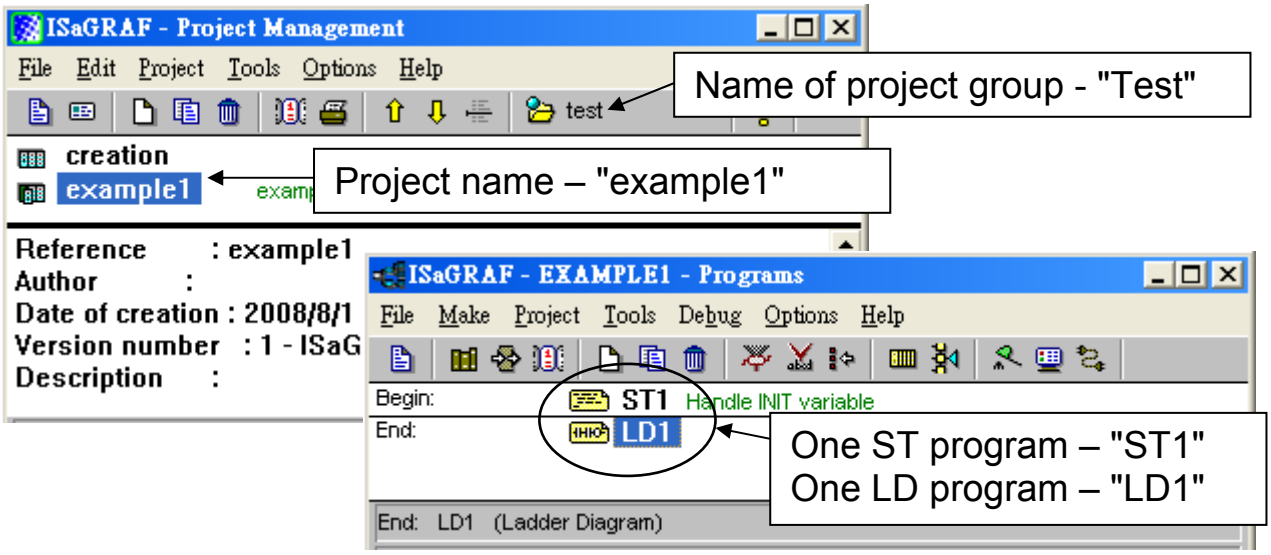

Variables declaration:

Name	Type	Attribute	Description
INIT	Boolean	**Internal**	**Initial value at “TRUE”**. TRUE means 1st scan cycle
OUT1	Boolean	**Output**	Output 1
OUT2	Boolean	**Output**	Output 2
OUT3	Boolean	**Output**	Output 3
K1	Boolean	**Input**	Push button 1
K2	Boolean	**Input**	Push button 2
T1	Timer	**Internal**	Time period of blinking

ST program – "ST1" outline:

```
IF INIT THEN

  (* Do init steps here *)
  INIT:= False;
  T1:= T#1500ms;

END_IF;
```

Ladder Logic Program Outline:

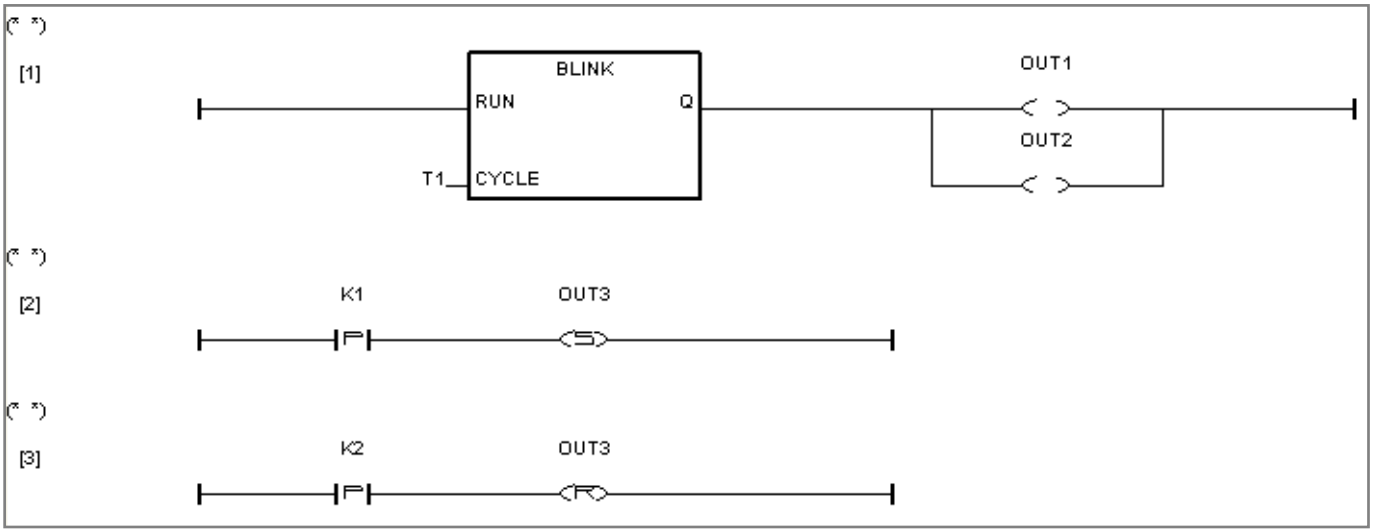

2.3.1 Open ISaGRAF-Project Management

Click on the Windows "Start" > "All Programs" > "ISaGRAF 3.5" > "Projects" as shown below.

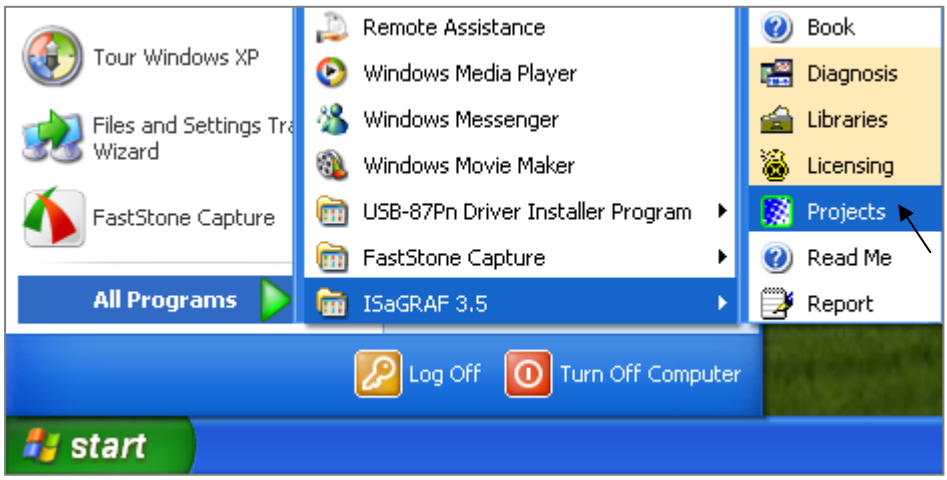

2.3.2 Creating An ISaGRAF User's Group

Click on the "Select Project Group", and then click on "New Group", then type in the name for the new user's group you wish to create, and last click on "OK".

After click "OK", the group name will show as below, please click "Select" to enter this group.

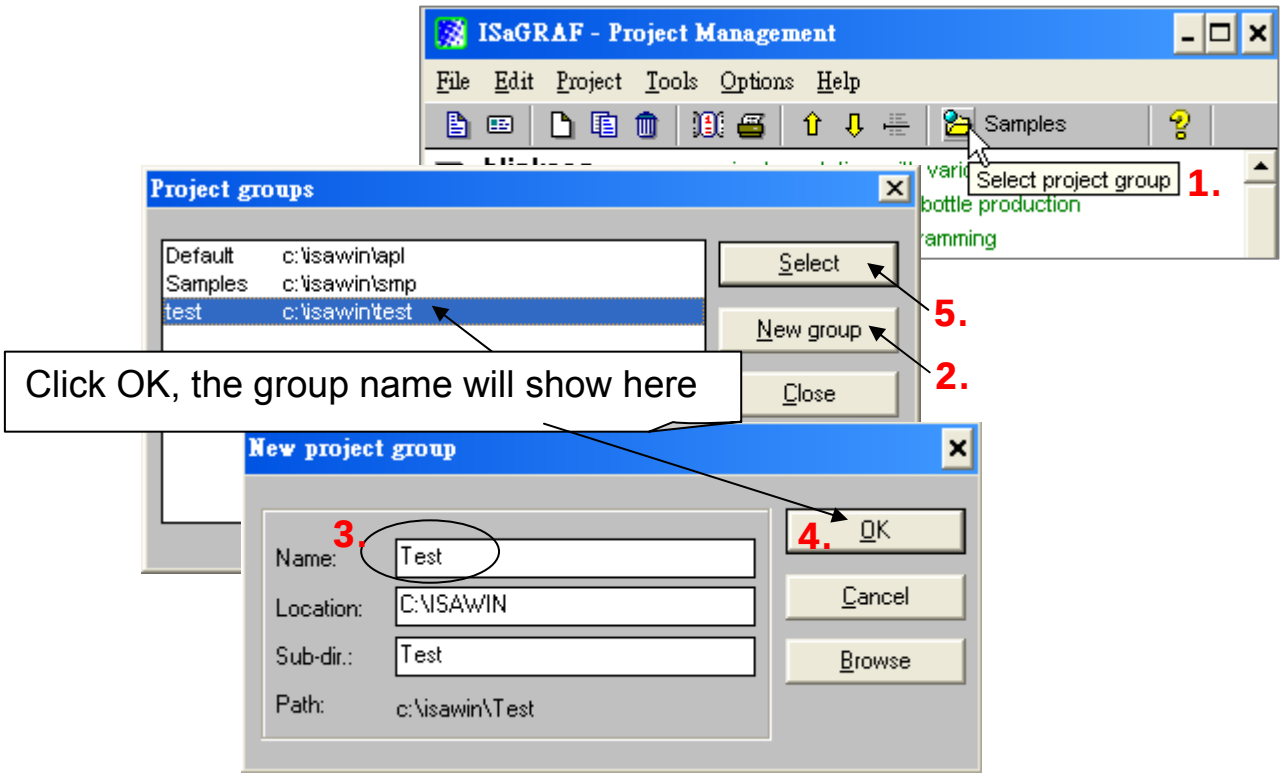

2.3.3 Creating a New ISaGRAF Project

To start a new ISaGRAF project, click on the "Create New Project" icon and then enter in the name for the new project. you can then enter additional information for your project by clicking on the "Edit" and then "Set Comment Text" menu as illustrated below.

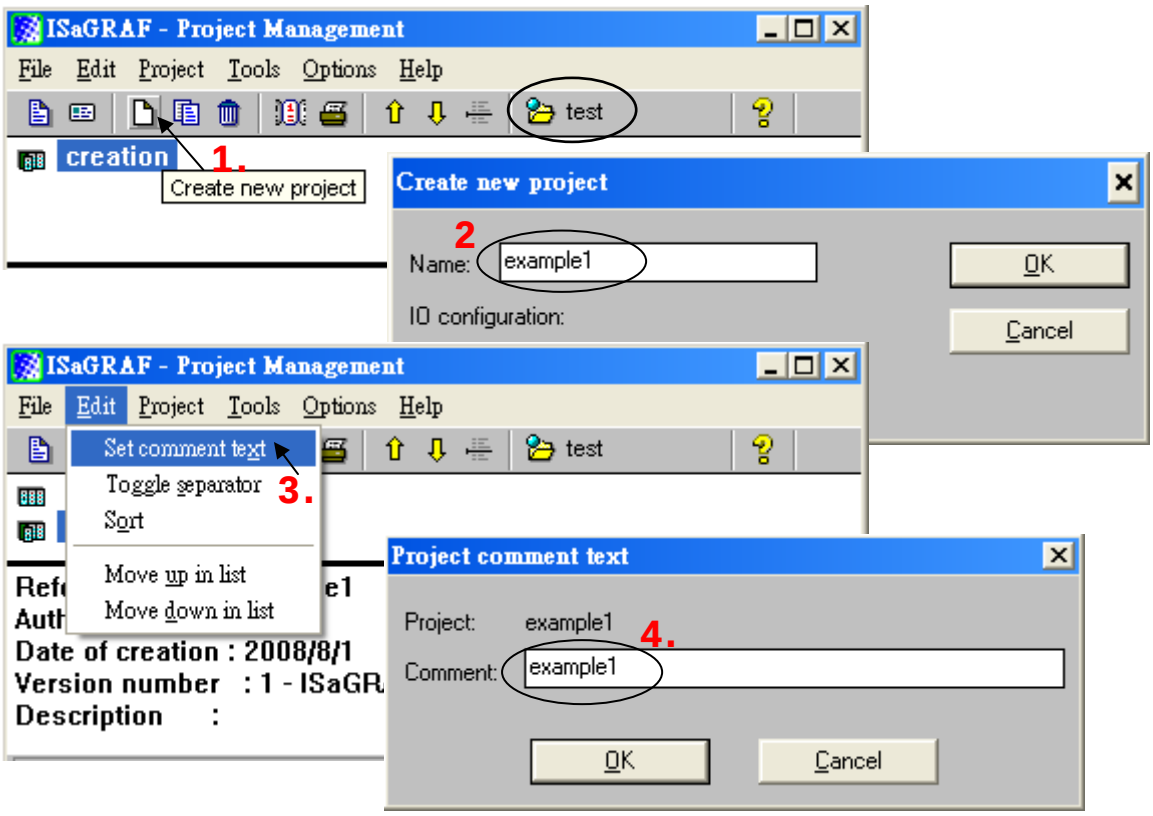

You will now see the name of the new project in the "Project Management" window. Double click on the name of the new project to open it.

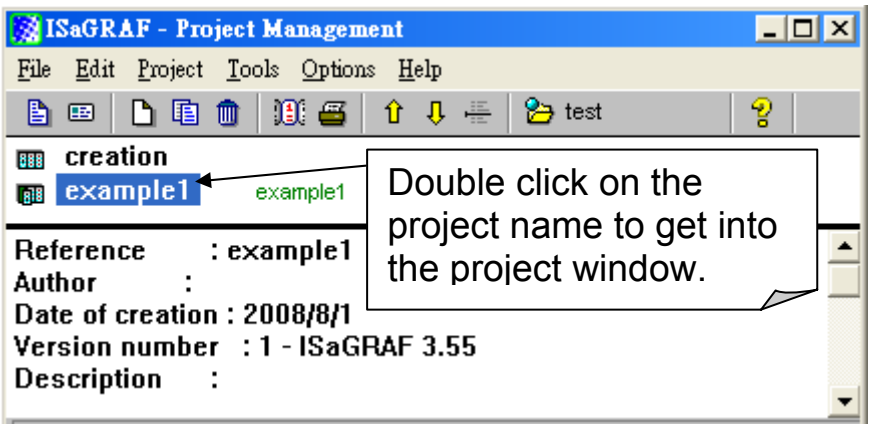

2.3.4 Declaring the ISaGRAF Project Variables

Before you can start creating an ISaGRAF program, you must first declare the variables that will be used in the ISaGRAF program.

Declaring Boolean:

1. To begin this process, first click on the "Dictionary" icon
2. Click on the "Booleans" tab to declare the Boolean variables that will be used in our example program.
3. Double click on the colored area below the "Booleans" tab, and a "Boolean Variable" window will open.

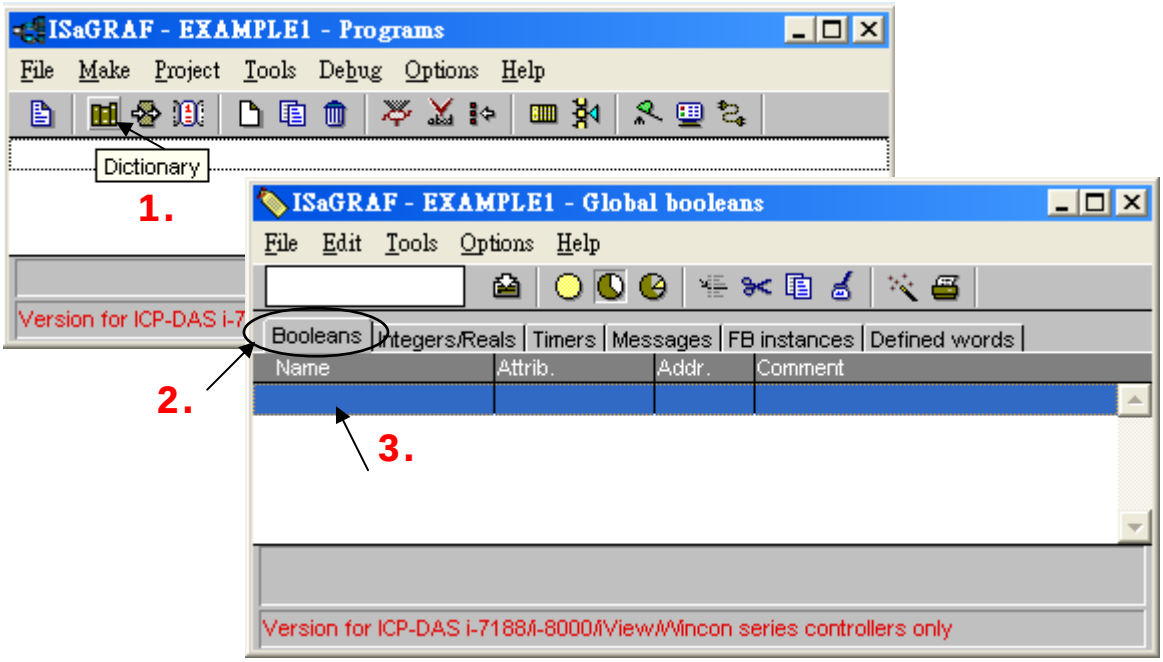

(Please refer to ch2.3 Variables declaration)

4. The variable "Boolean Variable Name" is "INIT"
5. "Flag to indicate first scan cycle or not" is added to the "Comment Section".

6. The type of "Attribute" in this example program – "INIT" will be an "Internal".
7. Lastly, check on the “set to true at init” since we need INIT has its initial value as TRUE when the project is just power up to run.
8. Then press the "Store" button to save it. The new Boolean variable has now been declared.

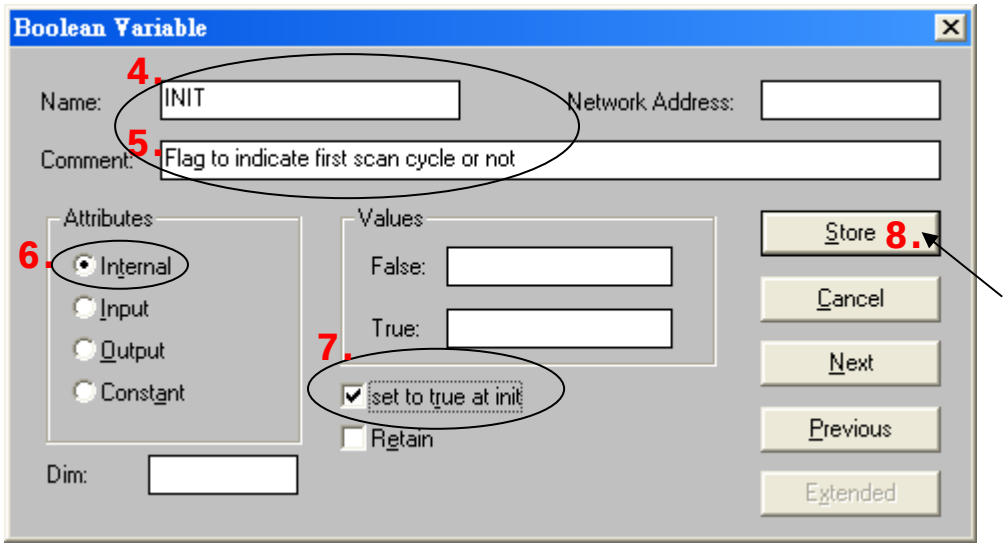

The other information areas that are provided for the programmer to fully explain how the variable will be handled.

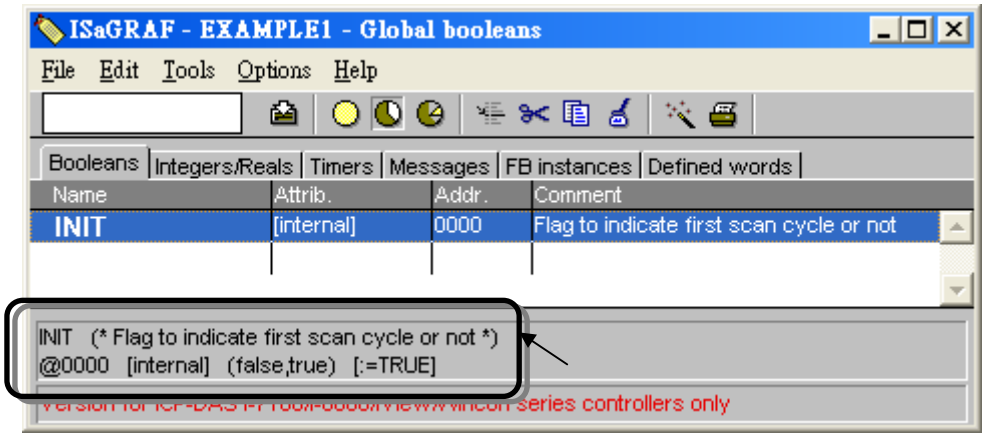

Note:

You MUST make sure that the variable you have declared has the desired attribute assigned.

If you decide that you want to change a project variable’s attribute, just double click on the variable name and you can reassign the attribute for the variable.

<u>Quick Declaration:</u>

There are three outputs used in this example program named "OUT1, OUT2, and OUT3". ISaGRAF provides a quick and easy way to declare like variables that are sequentially ordered. To begin this process,

1. Click on the "Quick Declaration" icon

2. Enter the "Symbol" name for the output variables being declared
3. Enter in the output number that you will start within the "Numbering" - "From" and "To" field (this example uses from 1 to 3).
4. Lastly, set the attribute to "Output" and then click "OK"

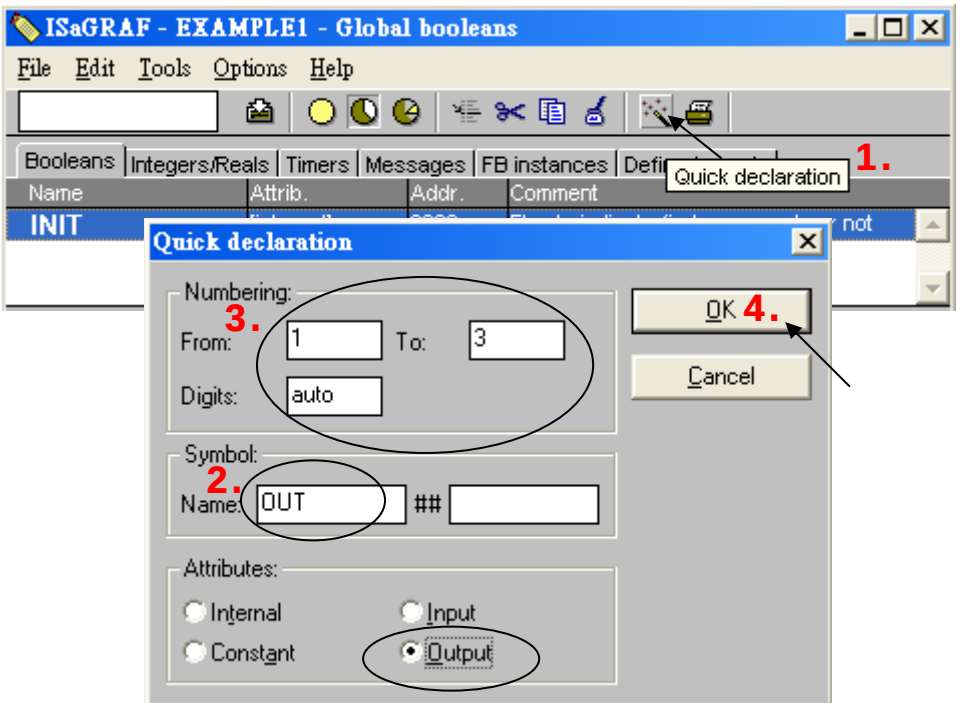

All three outputs will be immediately added to the "Global Booleans" window. Please click "Save" icon to save all the variables.

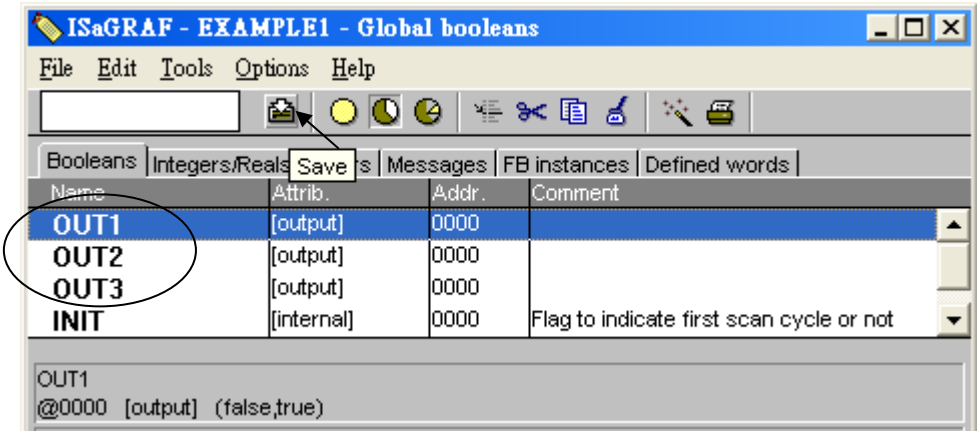

Use the same method as former to create another two variables – "K1" & "K2" however with "input" attribution.

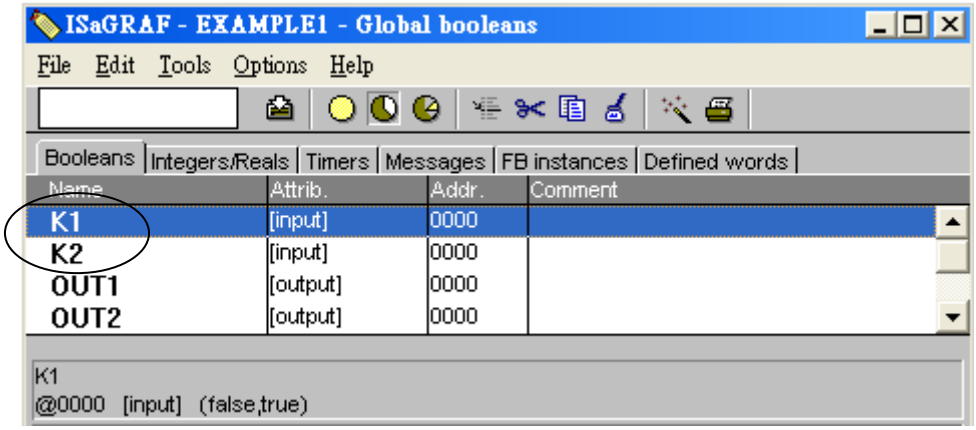

Declaring Timer

To declare the timer (T1) variable used in this example program, ① click on the "Timers" tab in the setup screen.② Double click on the colored area.

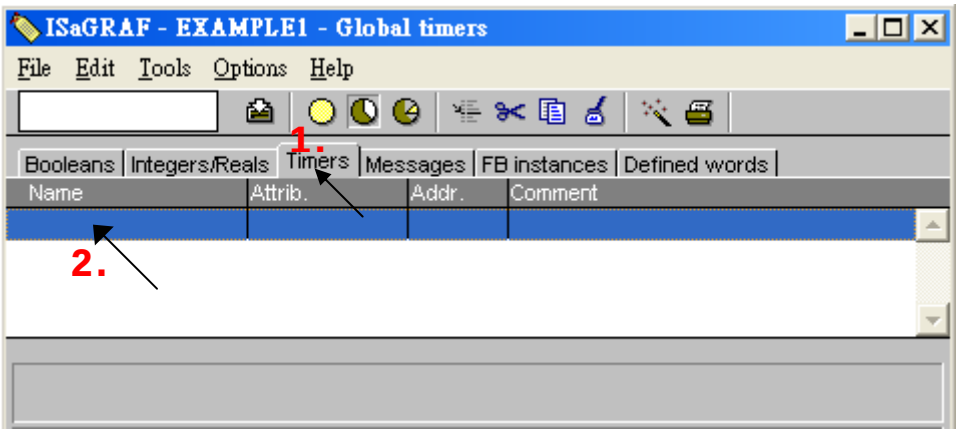

③ Enter the Name as "T1", ④ set the "Attributes" to "Internal",⑤ the "Initial Value" to "T#1s",⑥ then click on the "Store" button.

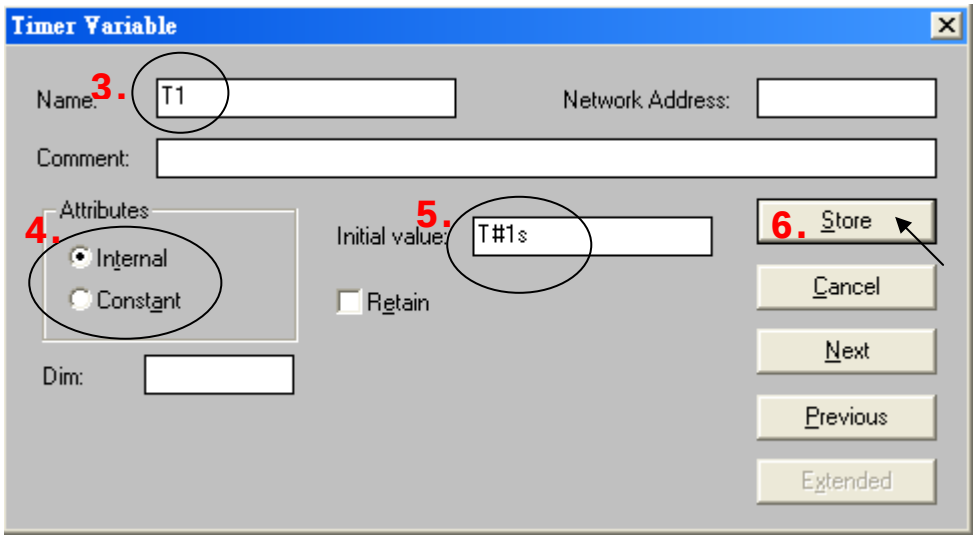

⑦ Then please click on "Save" icon and "X" to close the "Dictionary" window.

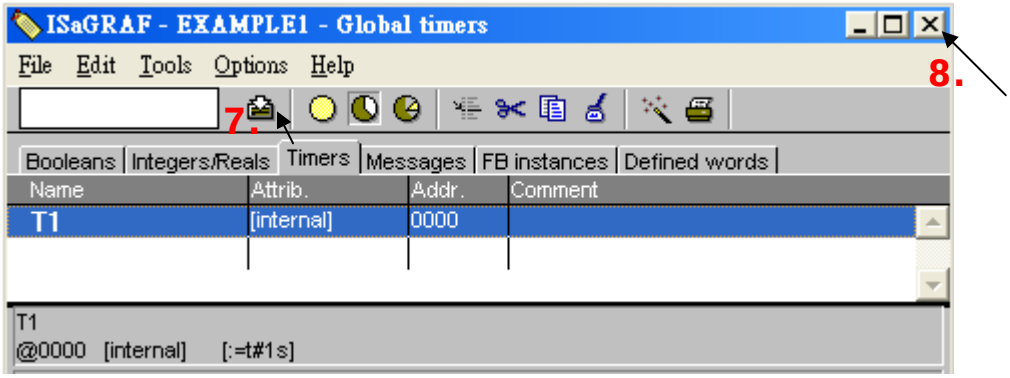

2.3.5 Create and Edit the ST - "ST1" Program

In this project we need an ST program to handle the "INIT" variable. As follows diagram, ① click on "Create new program" to add a ST program. ② Given the Name as "ST1", Comment as "Handle INIT variable", Language as "ST: Structured Text" and Style as "Begin: Main program". Then click on "OK".

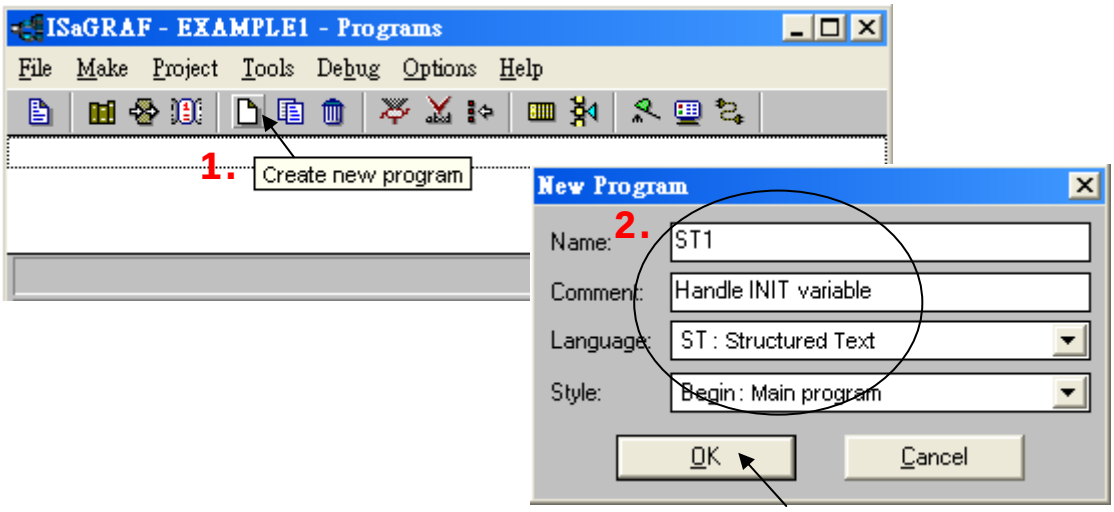

Now we have one program inside this project.

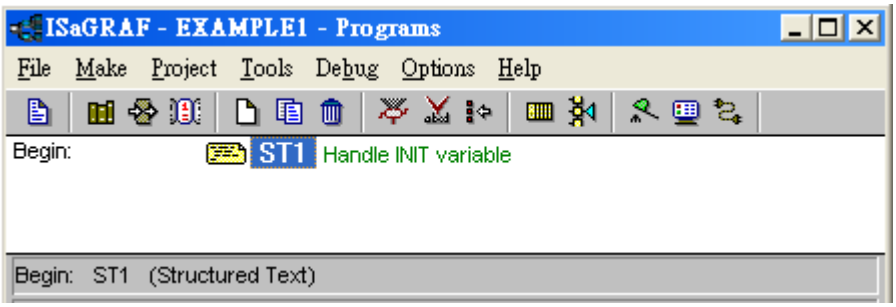

ISaGRAF will run every program one time in each PLC scan cycle. Programs in the "begin" area will run first, then the "Sequential" area, and last the "End" area. An ISaGRAF cycle run in the way as the below scheme.

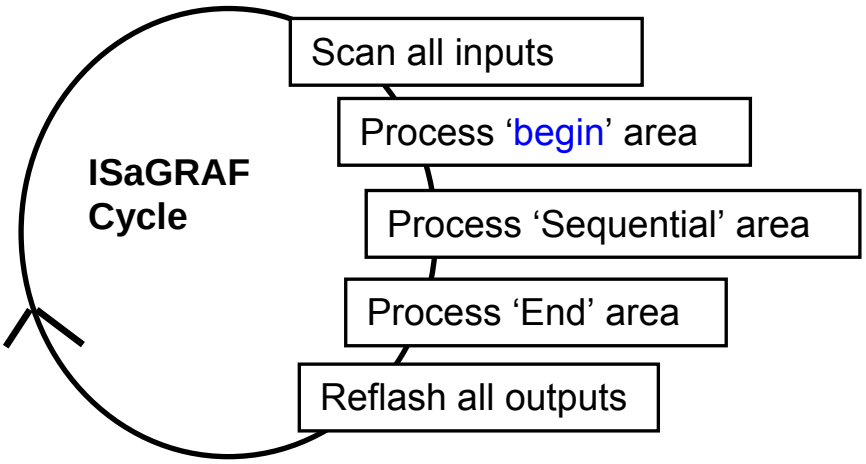

① Double click on "ST1" program to edit it.

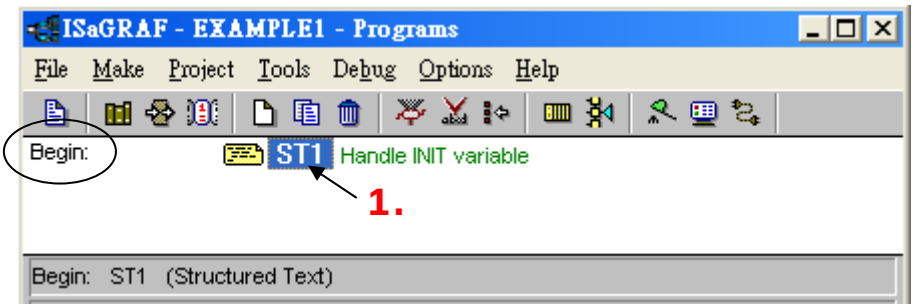

② Click on "save" and then exit when you finish it.

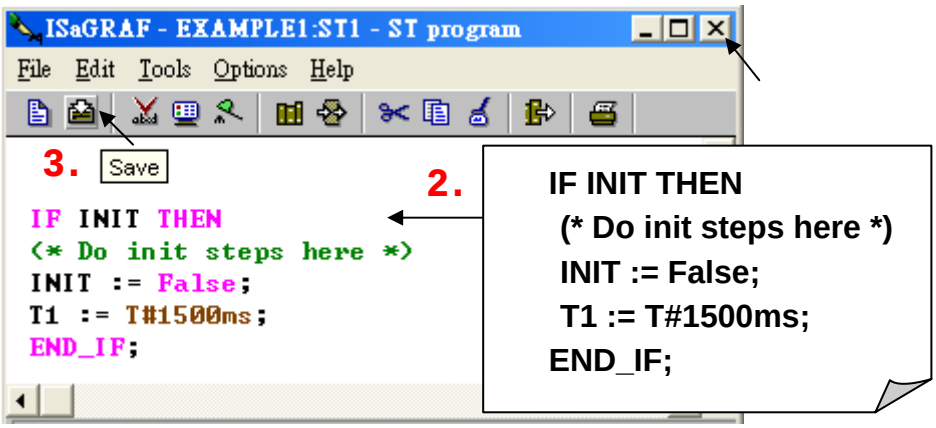

Note: Any character inside between **(*** and ***)** is the comment. Codes written here run only one time in the first scan cycle. They are usually some initial setting codes.

2.3.6 Create the LD - "LD1" Program

① Click on the "Create New Program" icon and the "New Program" window will appear. ② Enter the "Name" as "LD1", next, click on the "Language" scroll button and select "Quick LD: Ladder Diagram", and make sure the "Style" is set to "End: Main Program". You can add any desired text to the "Comment" column for the LD program, but it isn't required.

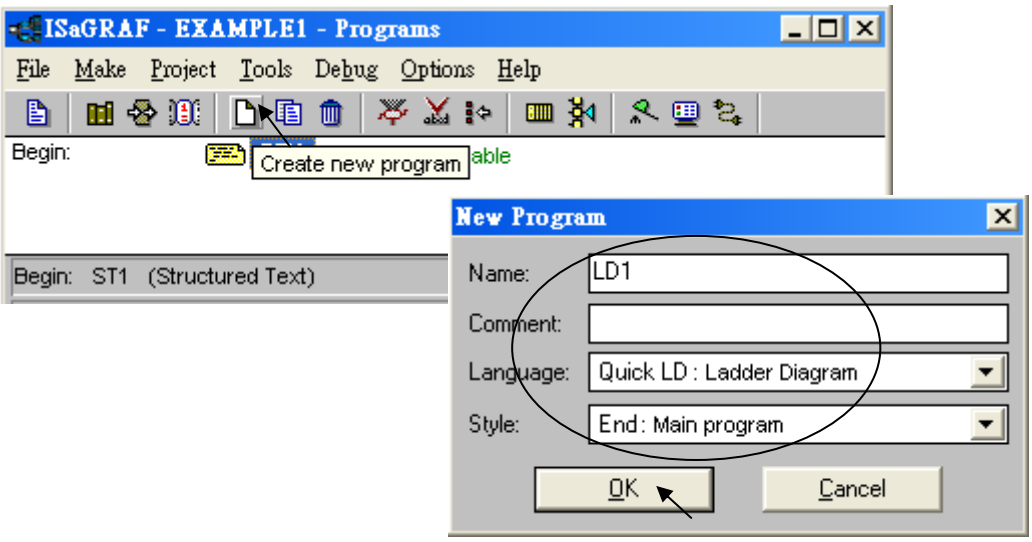

Now we have two programs inside this project. Please double click on the "LD1" to get into it.

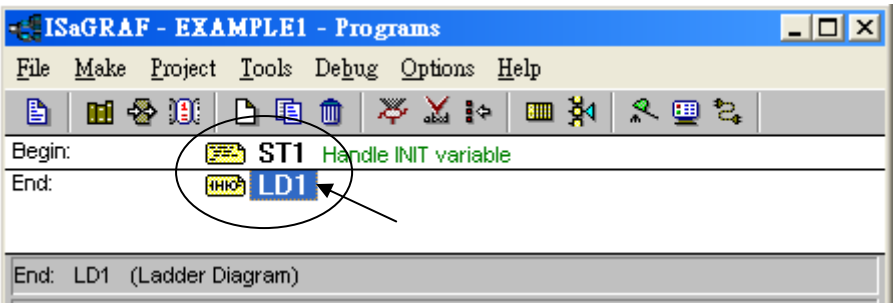

2.3.7 Edit the "LD1" Program

When you double click on the "LD1", named the "Quick LD Program" window will appear. To start programming our LD program, click on "Edit" from the main menu bar, and then click on "Insert Rung". "Insert Rung" means to insert a basic LD rung just above the current position.

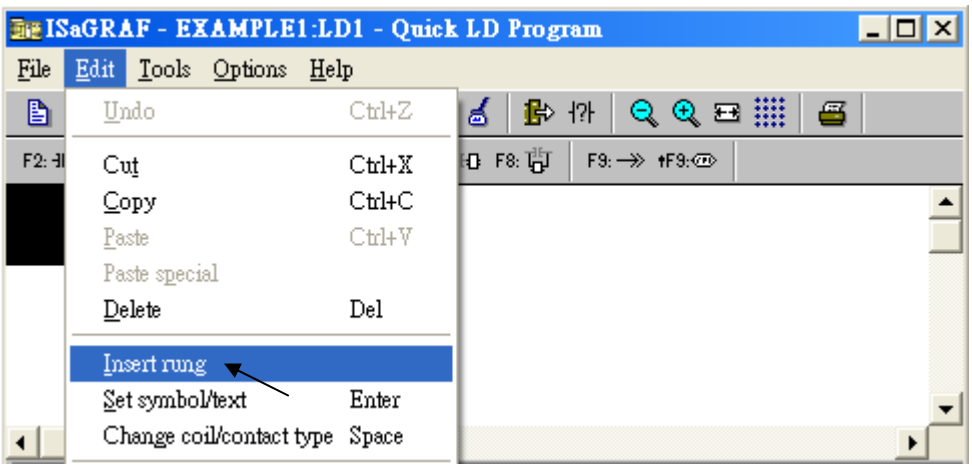

Or, you may just simply click on the "F2 (Contact on the Left)" icon, and the following will appear within the Quick LD Program window.

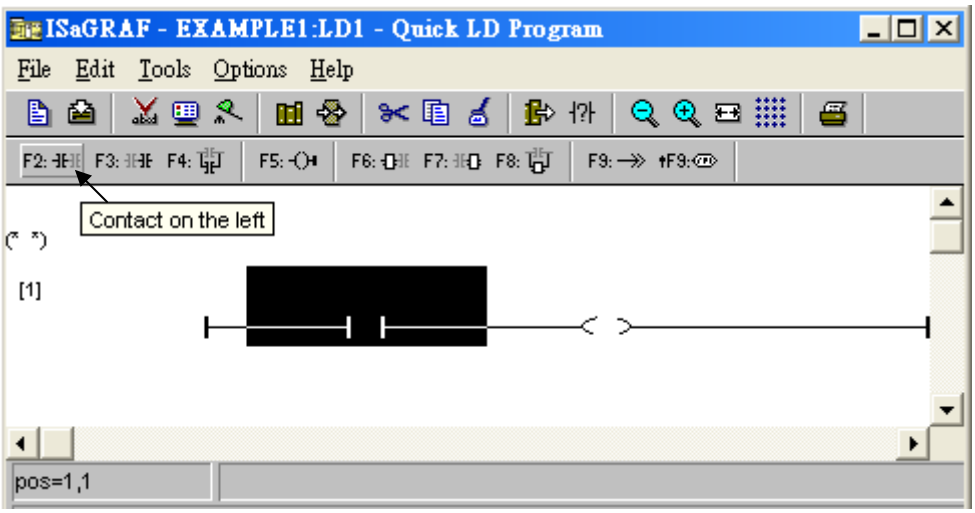

We are going to write the first line of the LD1 program. Move the cursor to the first "contact" and then click on "cut" to delete it.

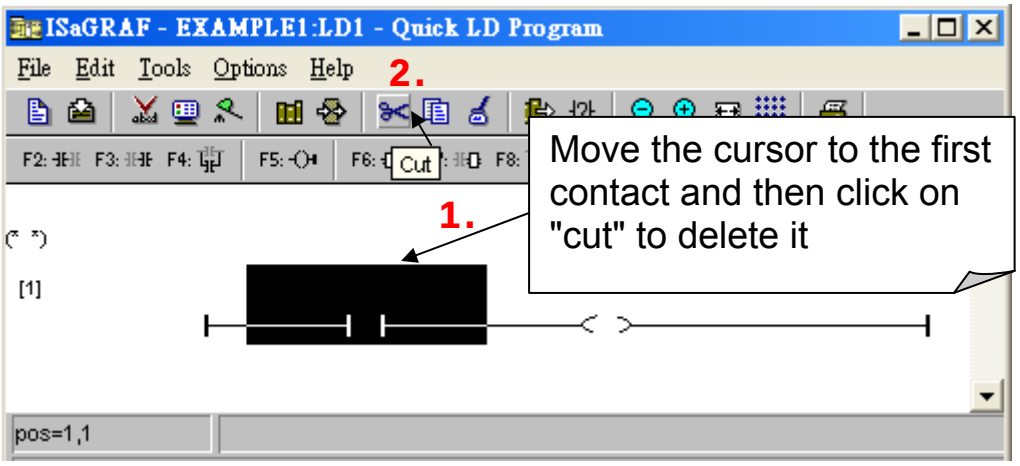

Click on the "F6 (Block on the left)" icon and you will create a block on the left of the "coil".

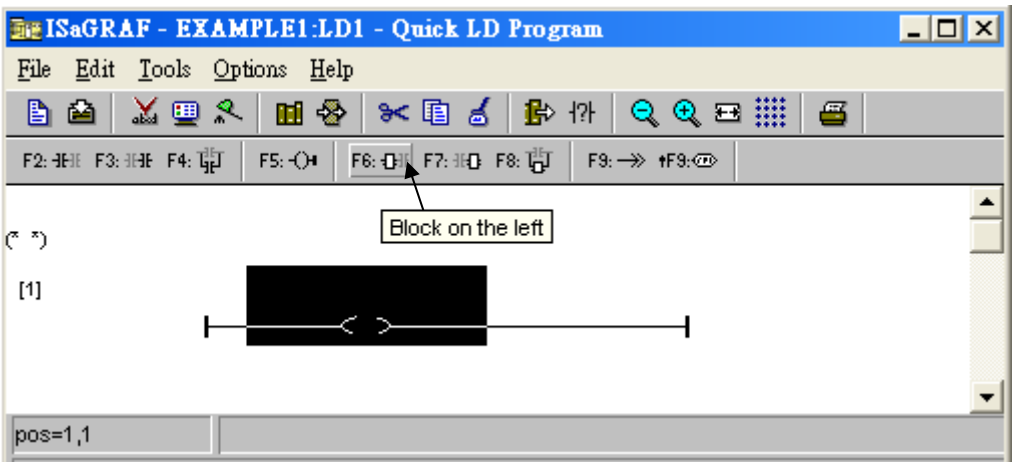

Now we are going to assign the associated variable & constant to each item. Double click anywhere inside of the block and the "Function Block" assignment window appears.

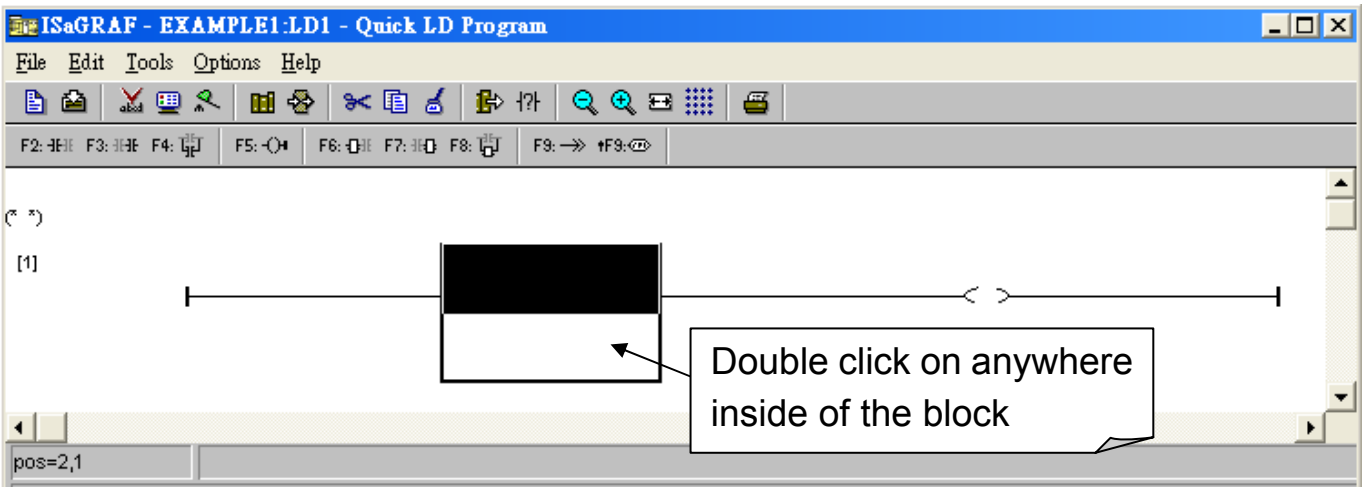

① Select the "BLINK" type function block. To learn how the "BLINK" function operates you can click on the "Info" button for a detailed explanation of its functionality.

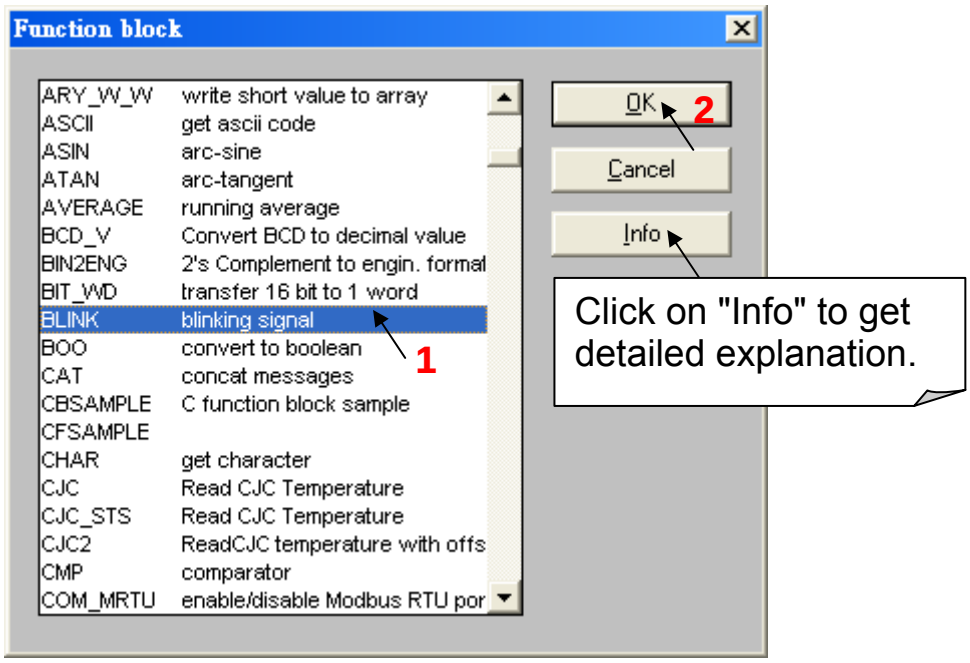

① Now move your cursor to the left of the parameter "CYCLE" of the "BLINK" block. Double click on it, ② select "Timer" and then ③ double click on variable name - "T1"

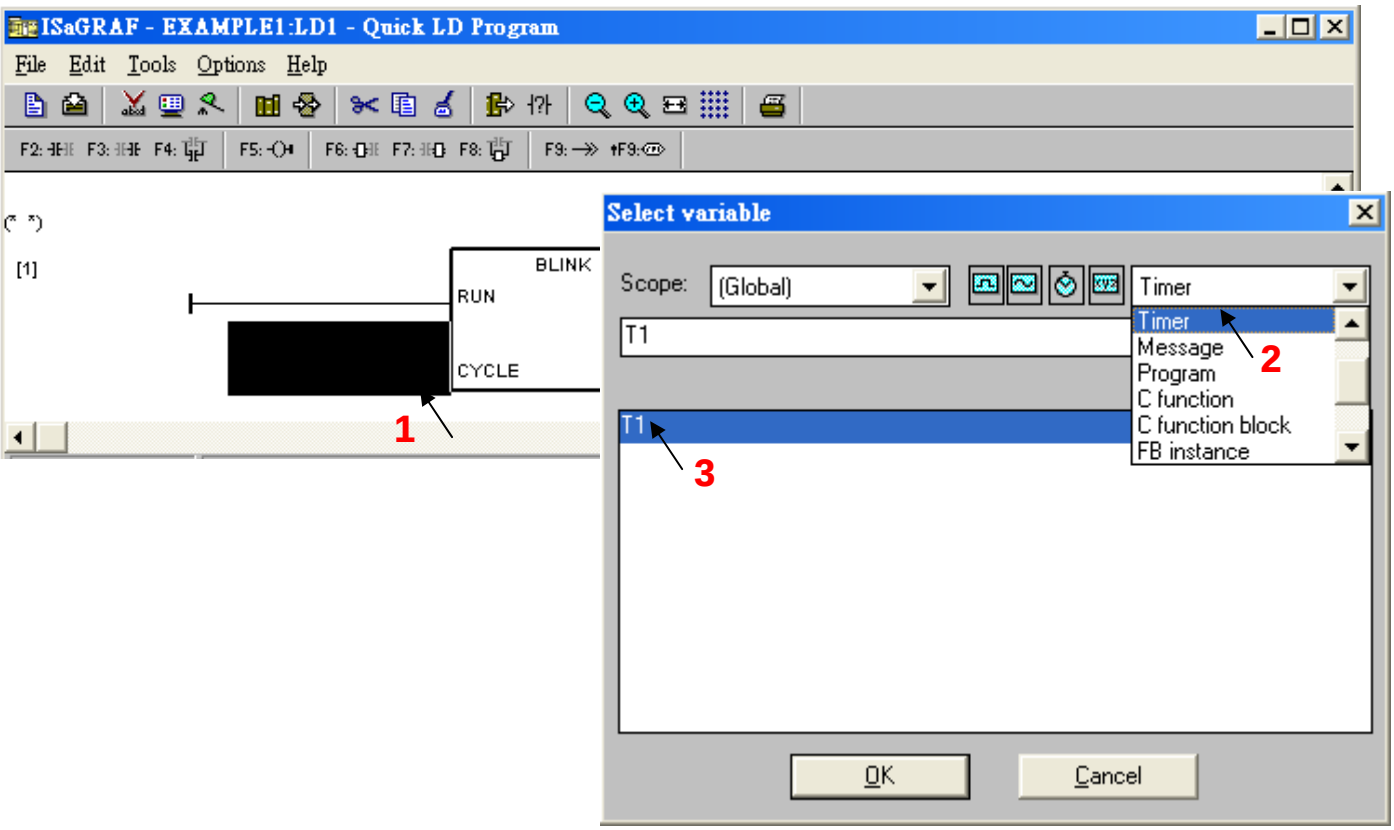

① Move your cursor to the "coil". Double click on it, ② select "Boolean" and then ③ double click on variable name – "OUT1".

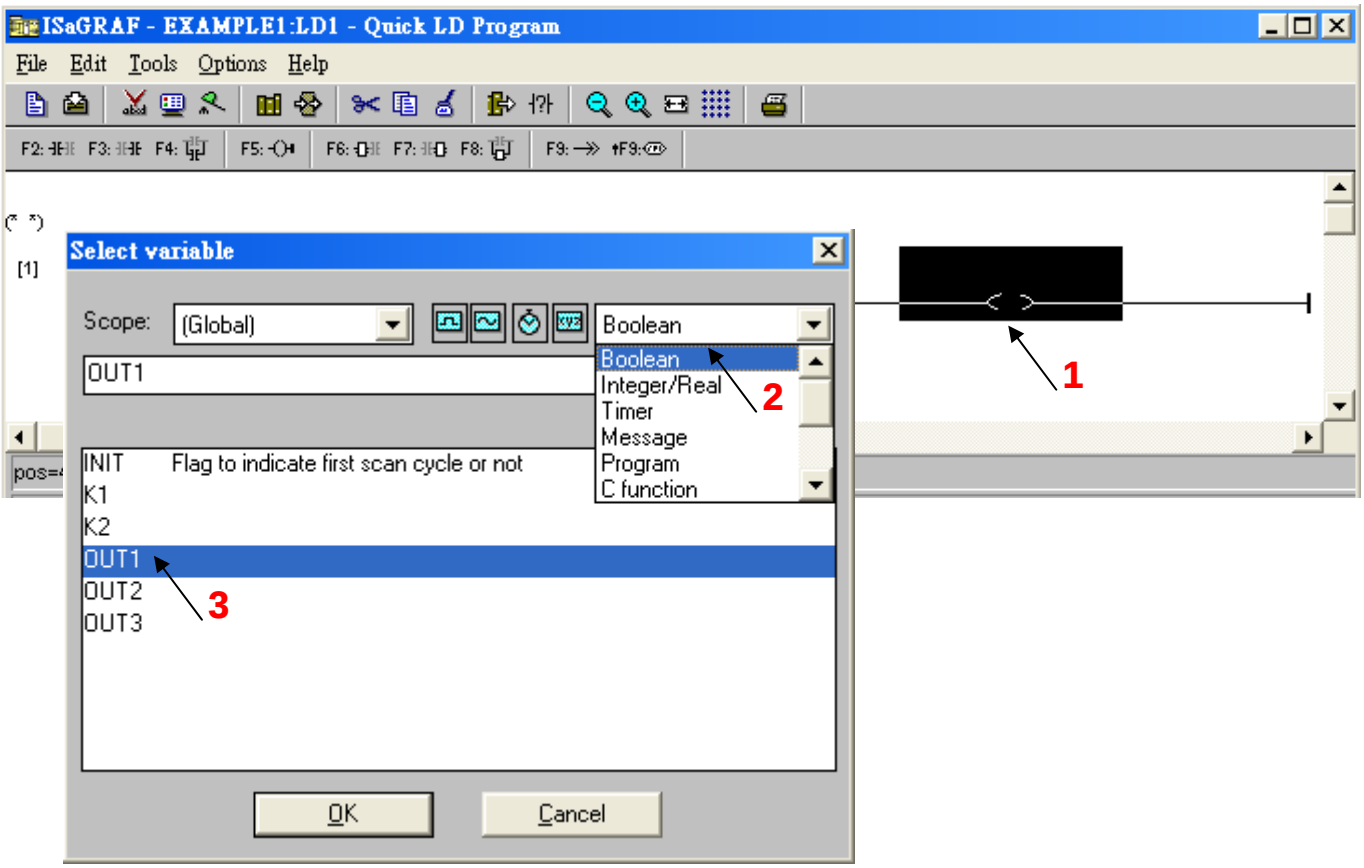

① Click on "F5" (coil) icon to create one another coil below the "OUT1", and then assign a Boolean name – "OUT2" to it.

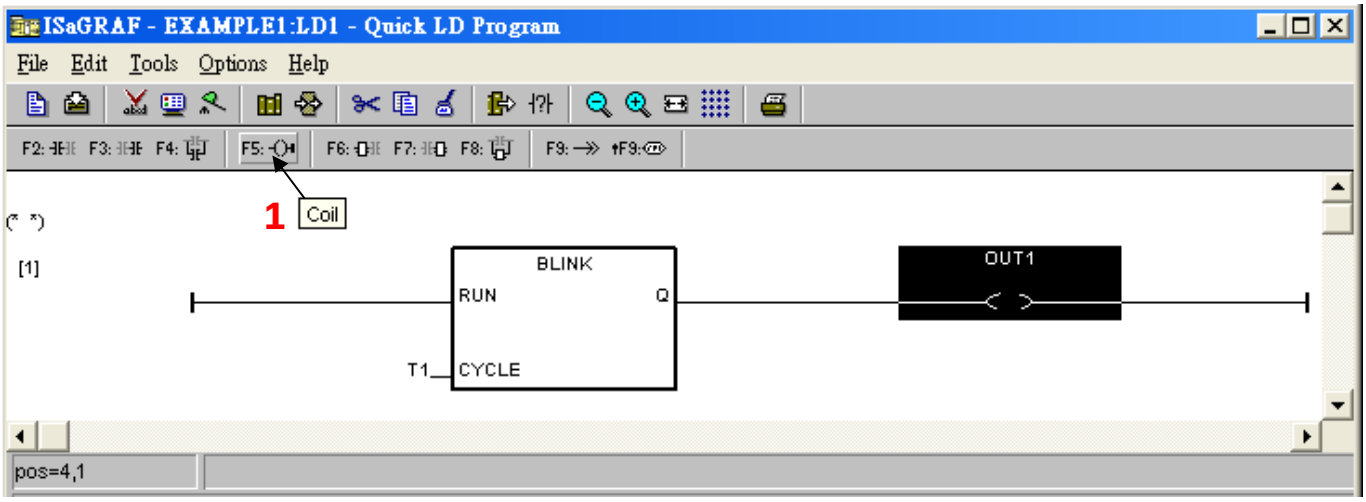

②Then we have the below window.

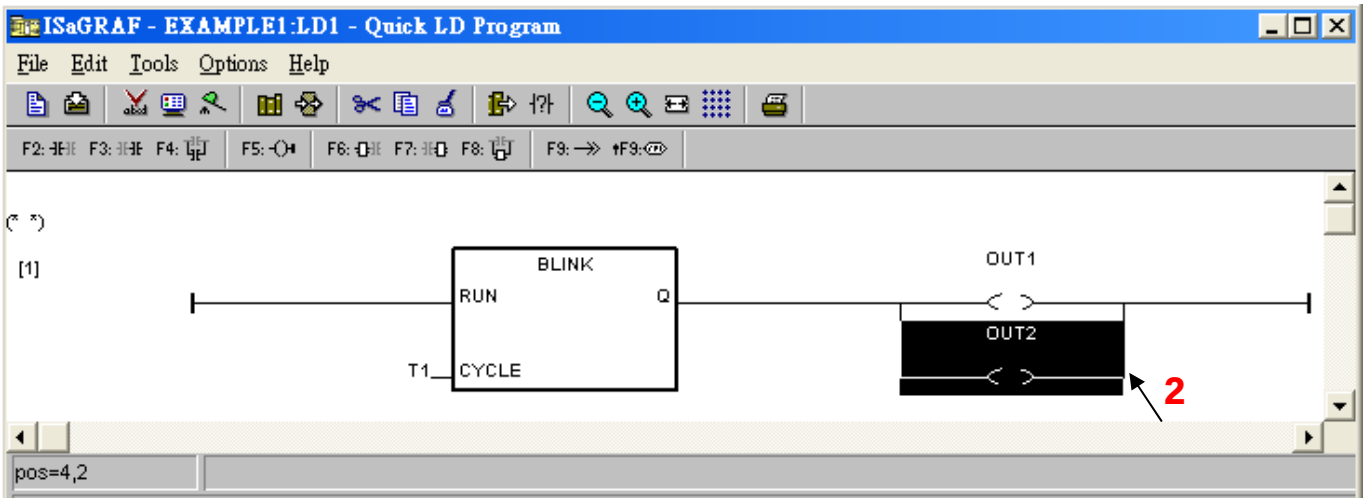

To insert the second LD rung, ① move the cursor to be under the first rung, ② then click on "F2" (Contact on the left) icon.

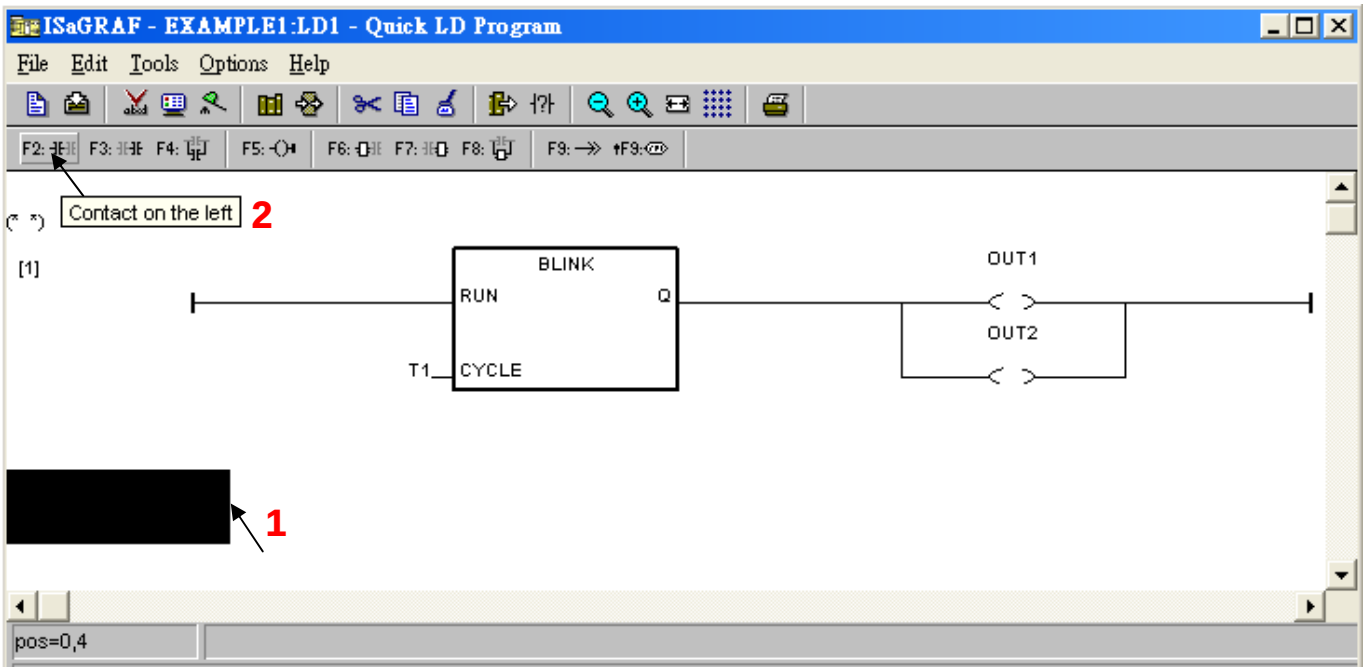

Then we have the below window.

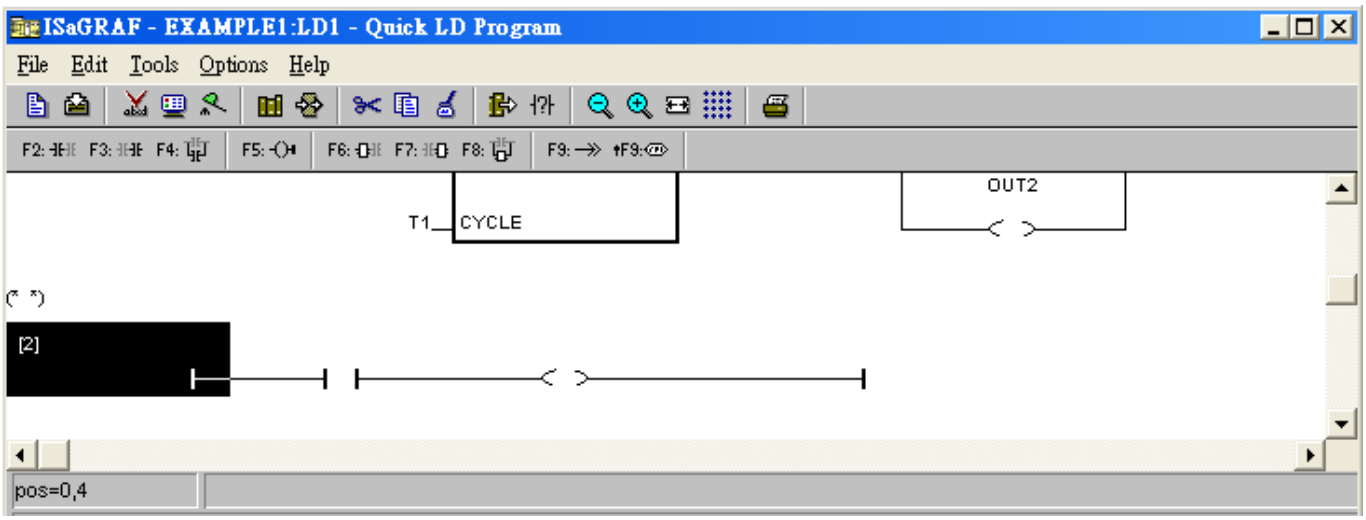

Using the same way as former to assign name "K1" and "OUT3" to the correct position.

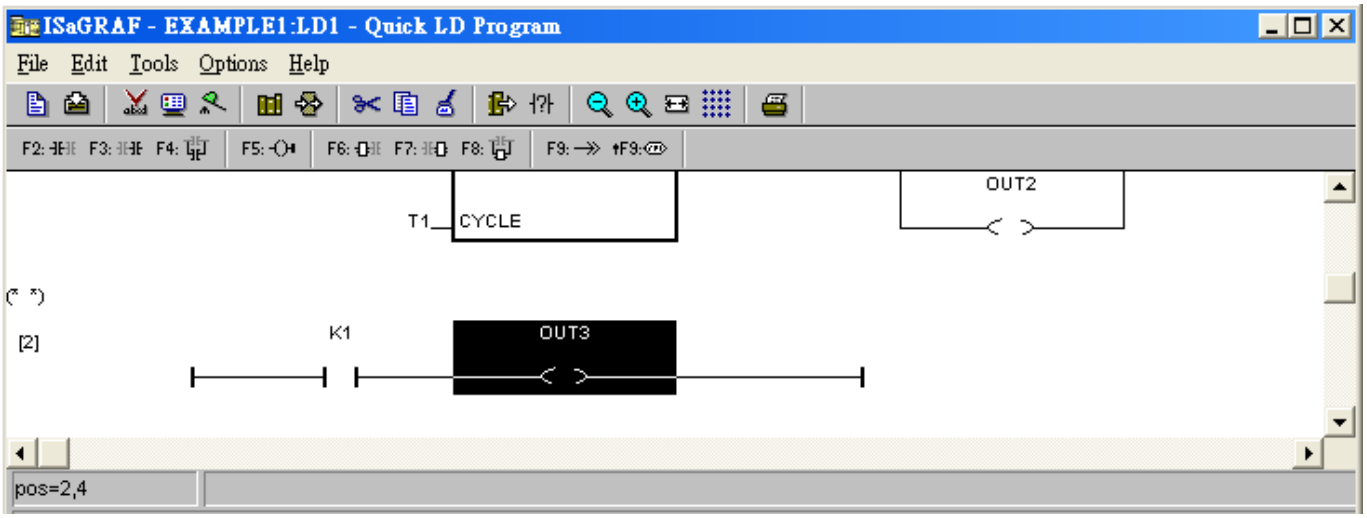

① Move the cursor to "K1" and then ② click on "Coil/contact type" icon several times to get the type of "P". The same way to setup "OUT3" as the type of "S".

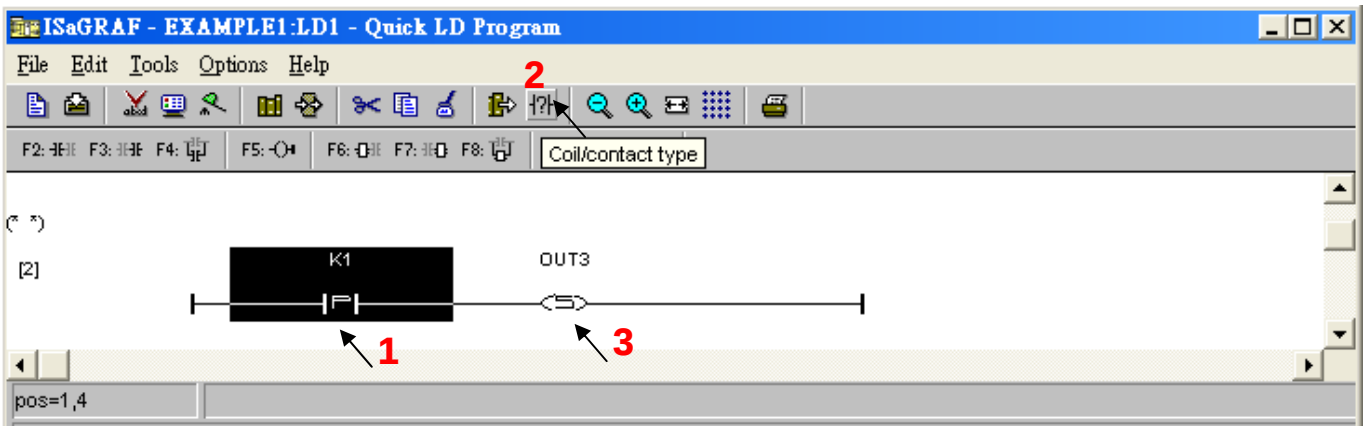

Using the same way as former to create the third rung as below. Note that K2 has type of "P"; OUT3 has type of "R".

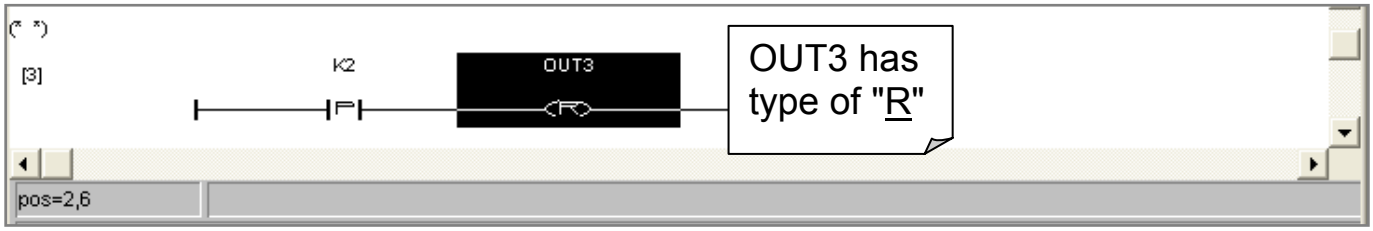

The LD1 program is finished now, ① click on the "Save" icon ② and then exit.

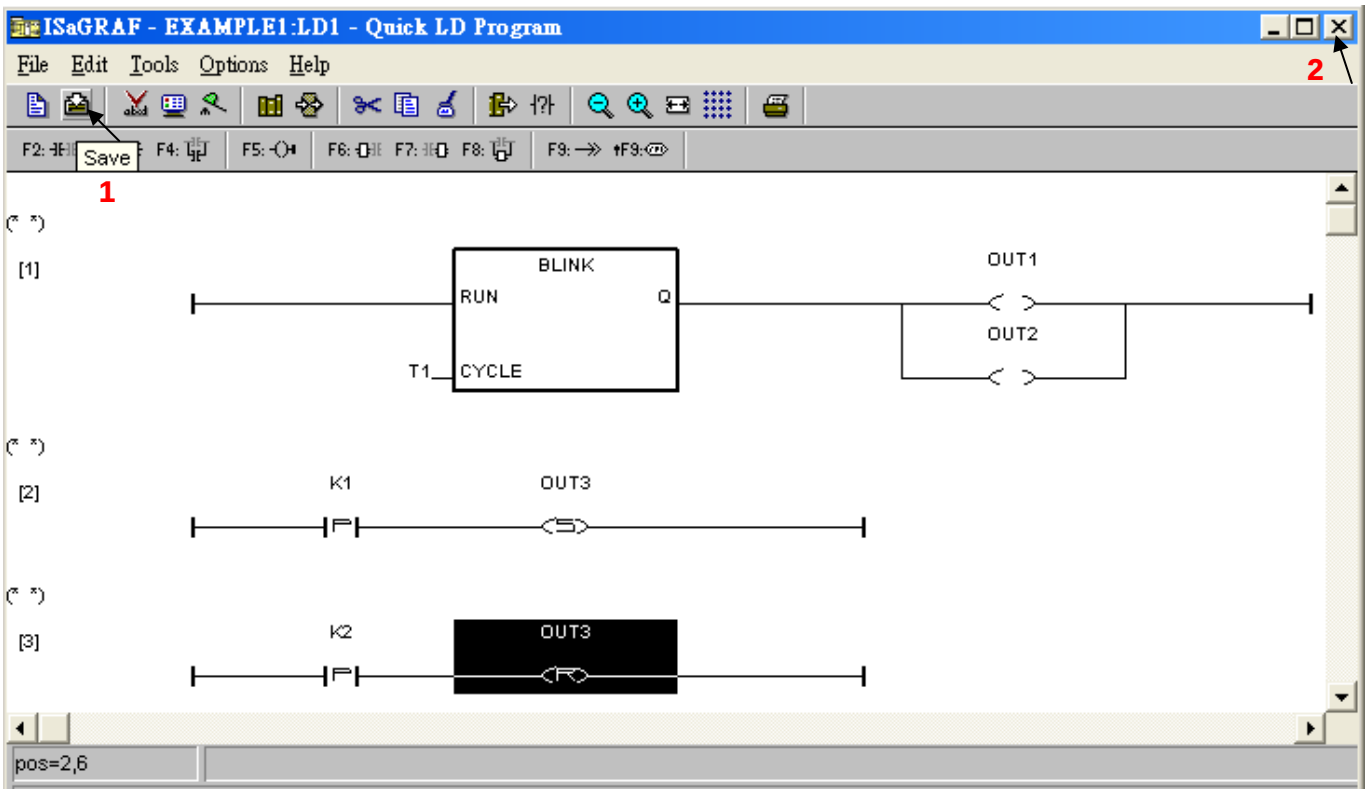

2.3.8 Connecting the I/O

We have defined variables name of "OUT1", "OUT2" & "OUT3" as "Output" attribution, while "K1" & "K2" as "Input" attribution in step 2.3.4.

These " Input " & "Output" variable should be map to physical I/O in the controller before they can work. To do that, ① click on "I/O connection" to get into the I/O connection window.

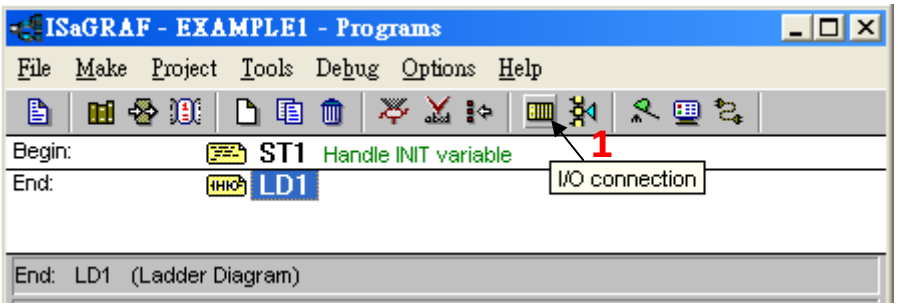

② Double click on the No. 8 slot and then ③ check on the "Boards" and double click on the "push4key: 4 button on panel of 8xx7".

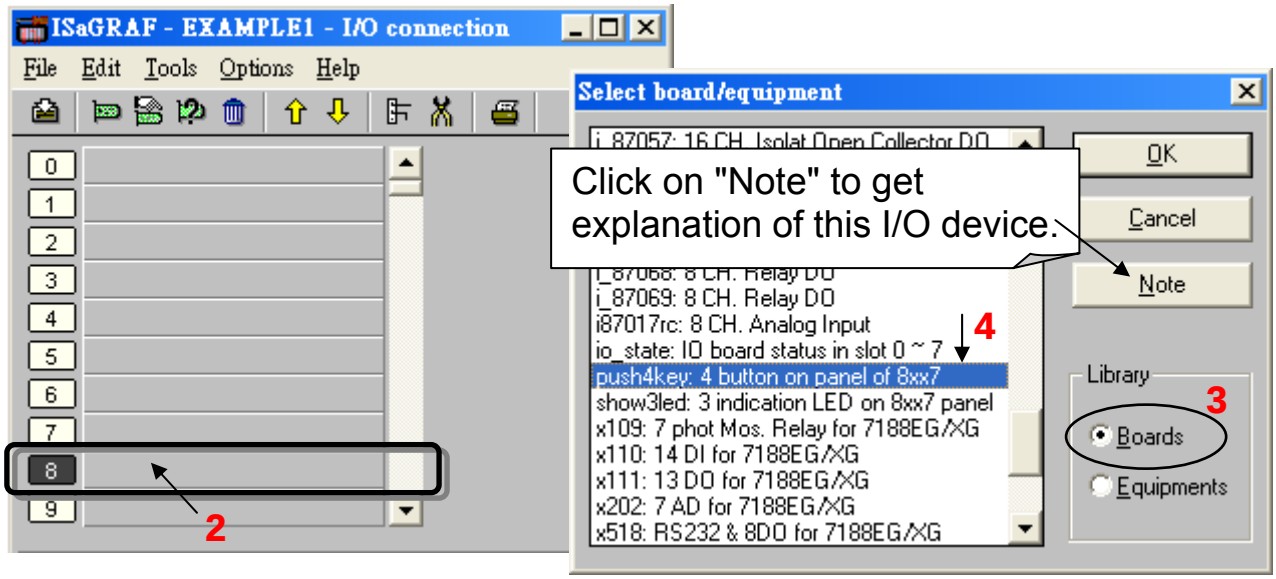

Then we have below window.

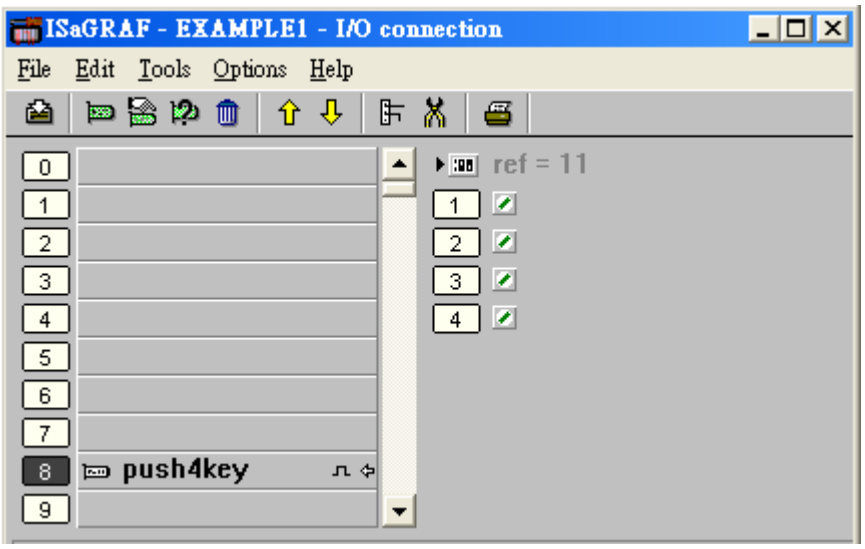

To map input variables "K1" & "K2" to the channel No. 1 & 2 of the "push4key", ① double click on the channel 1 and then ② click on "Connect" twice to connect K1, K2 to channel 1 and channel 2.

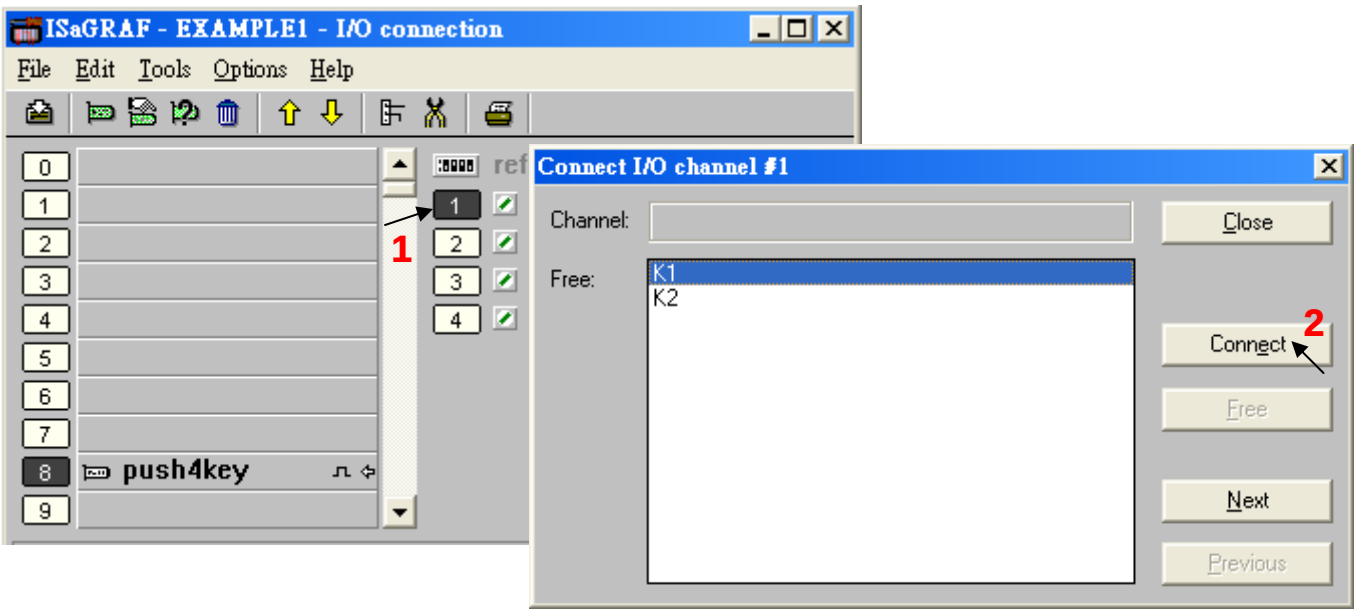

By the same way, please ① connect output device "show3led" to slot 9 and ② its related channel 1, 2 & 3. Then we have below window. ③ Click on "Save" and ④ then exit.

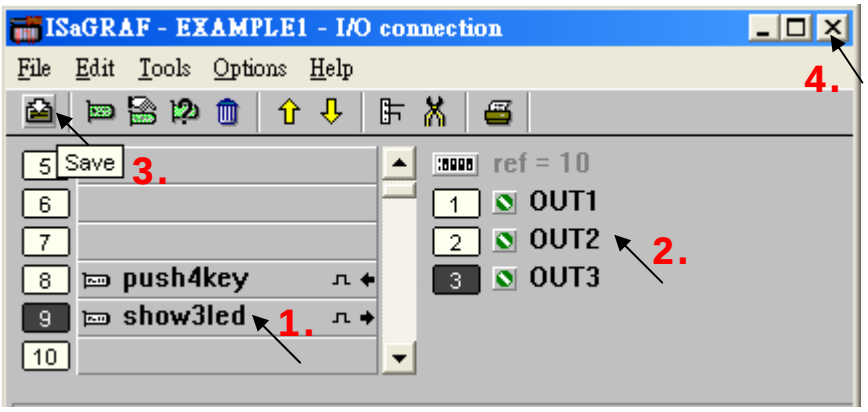

IMPORTANT NOTICE:

1. I/O Slots 0 through 7 are reserved for REAL I/O boards that will be used in the iP-8447/8847 controller. You can use slot No. 8 and above for additional functionality as illustrated by the example program.

2. All of the variables with "Input" and "Output" attribute MUST be connected through the I/O connection as described above for any program to be successfully compiled.

   Only the Input and Output attributed variables will appear in the "I/O Connection" window. In this example we have only 3 Boolean output variables - OUT1, OUT2 & OUT3 and 2 Boolean input variables – K1 & K2.

2.4 Step 4 - Compiling & Simulating the Example Project

★ **For ANY AND EVERY ISaGRAF program to work properly with any of the iP-8447/8847 controller systems, it is the responsibility of the programmer to properly select the correct "Compiler Options". You MUST select the "ISA86M: TIC Code for Intel" option as described below.**

To begin the compilation process, first click on the "Make" option from the main menu bar, and then click on "Compiler Options" as shown below.

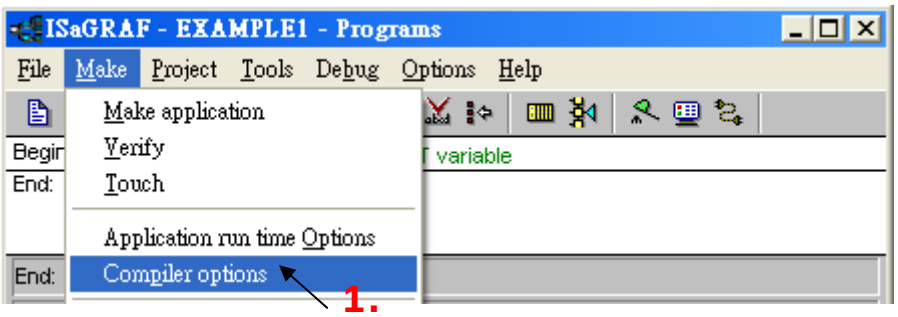

The "Compiler Options" window will now appear. Make sure to select the options as shown below then press the "OK" button to complete the compiler option selections.

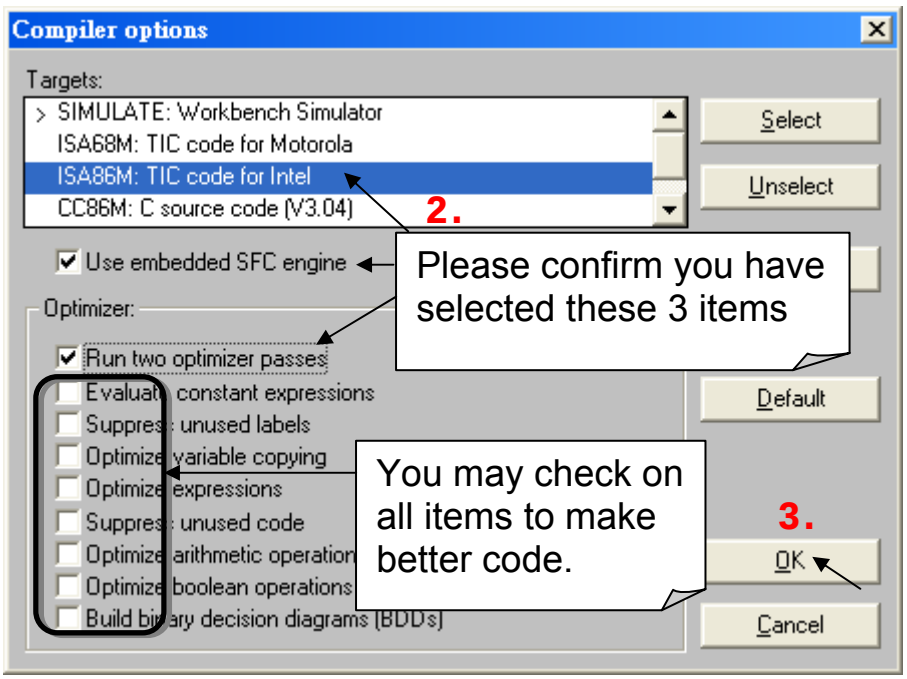

2.4.1 Compiling the LD Project

Now that you have selected the proper compiler options, click on the "Make Application Code" icon to compile the example project. If there is no compiler errors detected during the compilation process, CONGRATULATIONS, you have successfully created our example program.

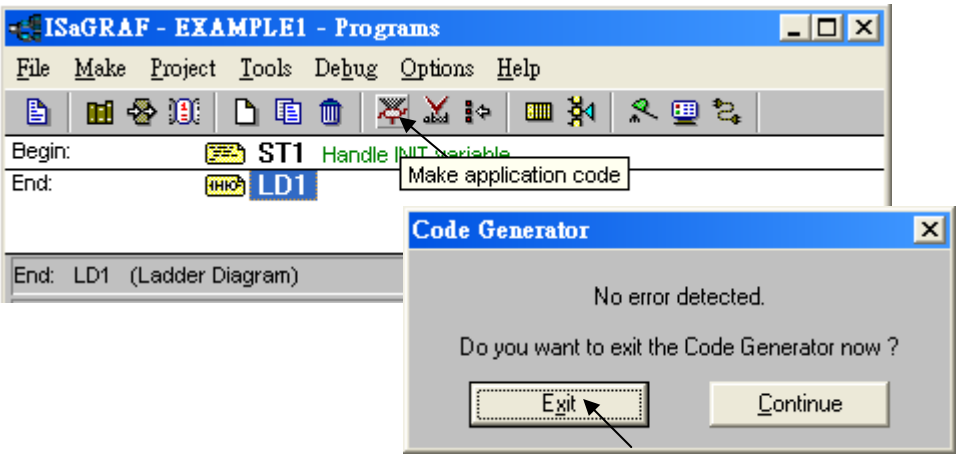

<u>If errors</u> are detected during the compilation process, just click on the "Continue" button to review the error messages. Return to the Project Editor and correct the errors as outlined in the error message window.

2.4.2 Simulating the LD Project

If the compilation is Ok, you may simulate the project on the PC to see how the program works without the controller. To do that, click on the "Simulate" icon.

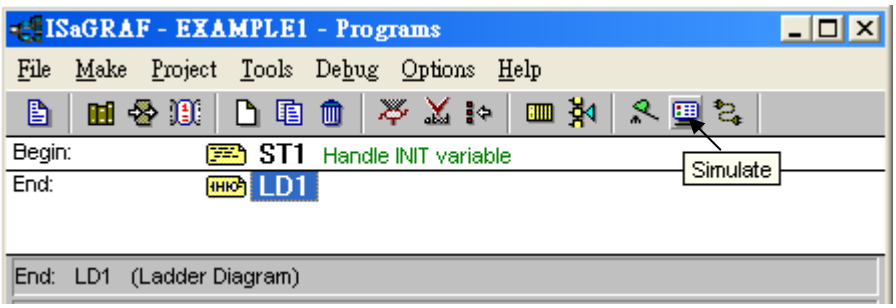

When you click on the "Simulate" icon three windows will appear. The windows are the "ISaGRAF Debugger", the "I/O Simulator", and the "ISaGRAF Debug Programs" windows.

If the I/O variable names you have created DO NOT appears in the I/O simulator window, just ① click on the "Options" ➔ "Variable Names" selection and the variable names you have created will now appear next to each of the I/O's in the simulator window.

In the "ISaGRAF Debug Program" window, ② double click on the "LD1" where the cursor below is positioned. This will open up the ISaGRAF Quick LD Program window and you can see the LD program you have created.

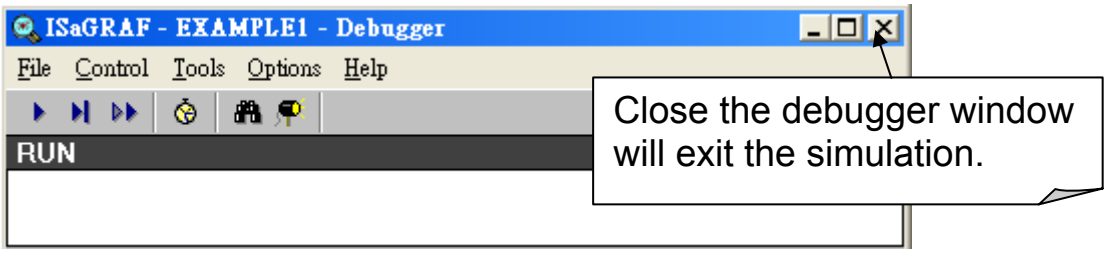

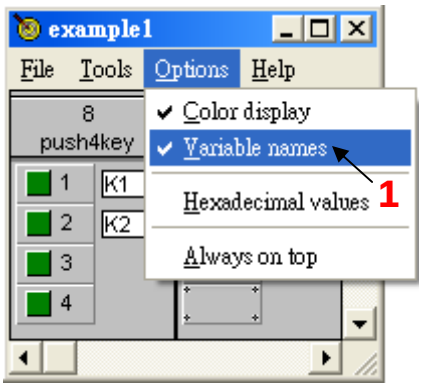

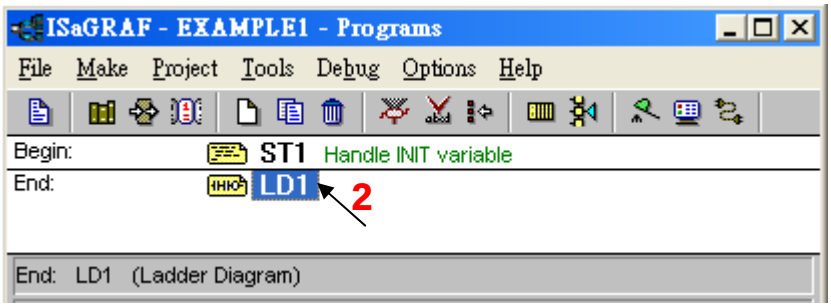

2.4.3 Running the Simulation Program

When you double click on "LD1" in the "ISaGRAF Debug Programs" window, the follow window should appear. You can see outputs "OUT1" and "OUT2" will blink in the period of 1500ms.

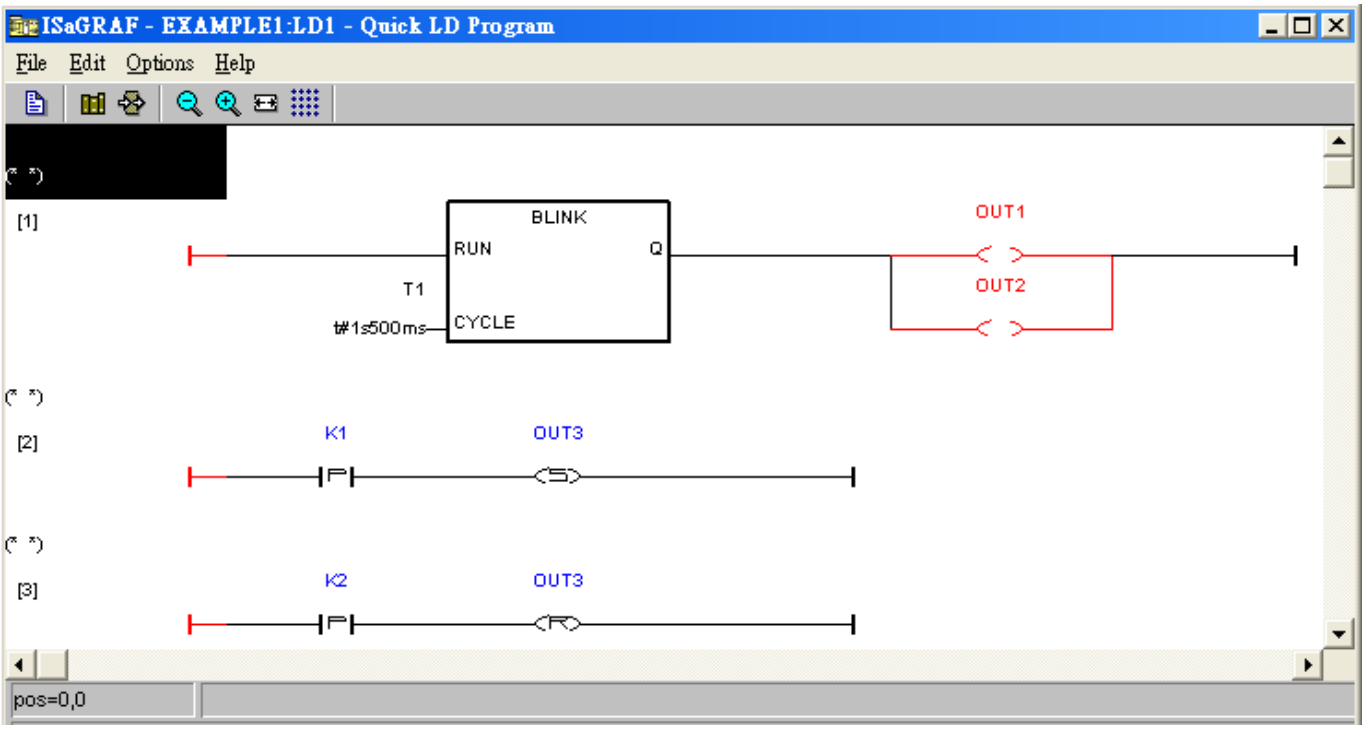

You can adjust the "T1" variable while the program is running. To accomplish this, ① click on the "Dictionary" icon which will open the "ISaGRAF Global Variables" window as shown in the first two pictures below. ② Click on "Timers" tab and then ③ double click on "T1" ④ to change the timer value to "T#500ms" (this means 0.5 second). ⑤Then click on "Write".

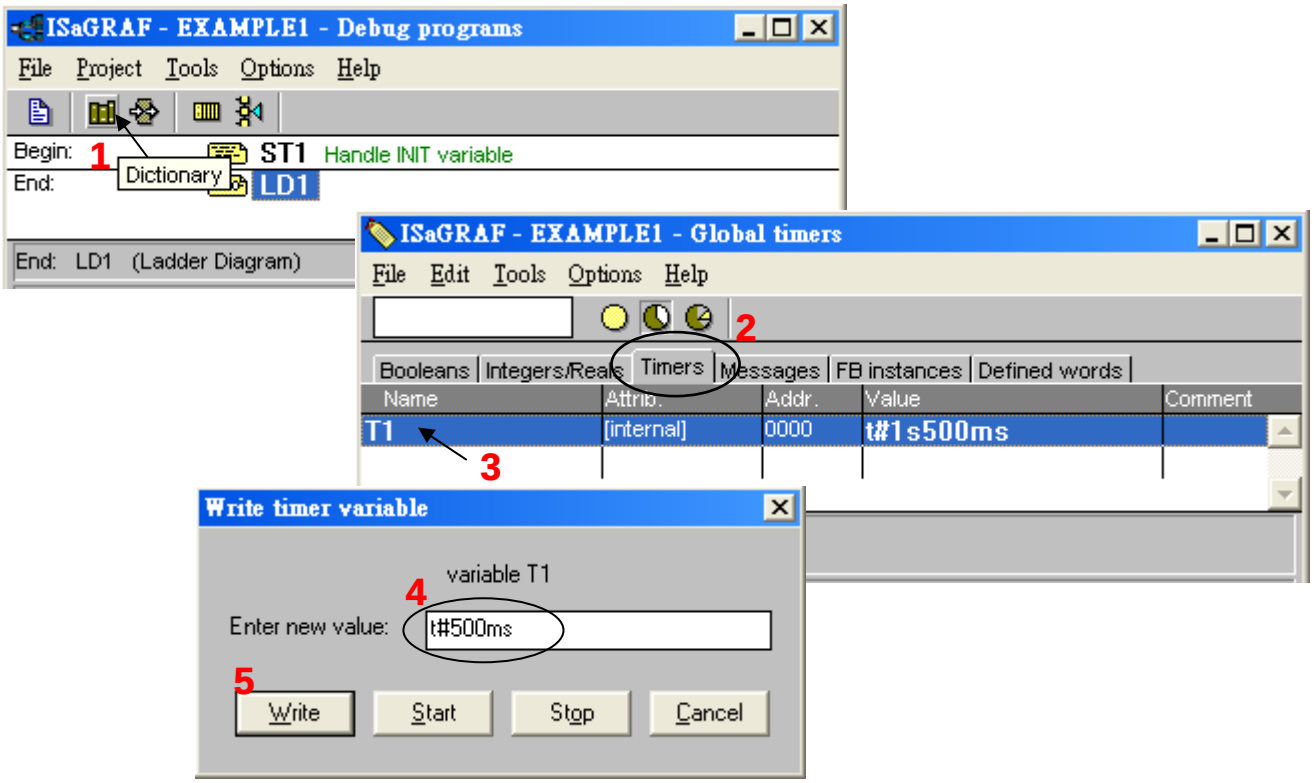

Now we are going to simulate the "K1" & "K2" input. Click on "K1" using the right button of the mouse. You will see "OUT3" is lighted. Please try "K2" by yourself.

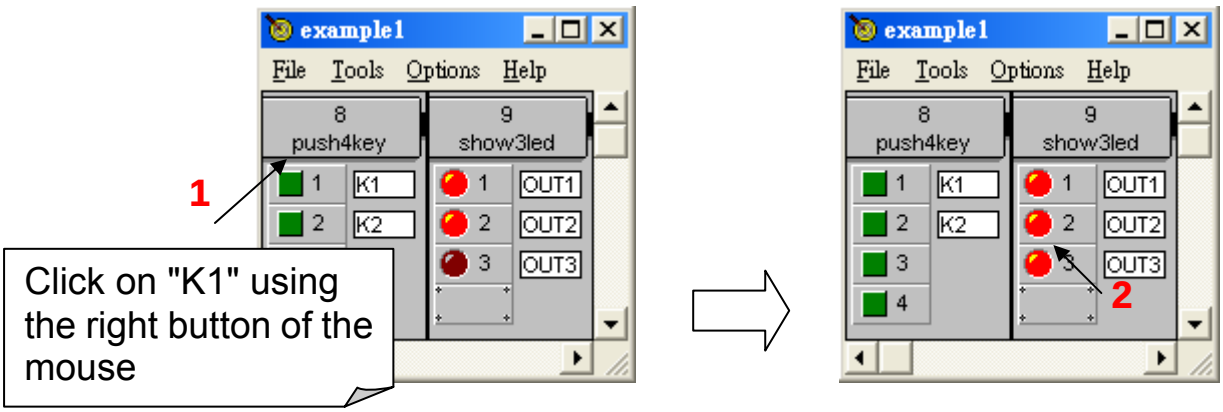

To exit simulation, please close the debugger window.

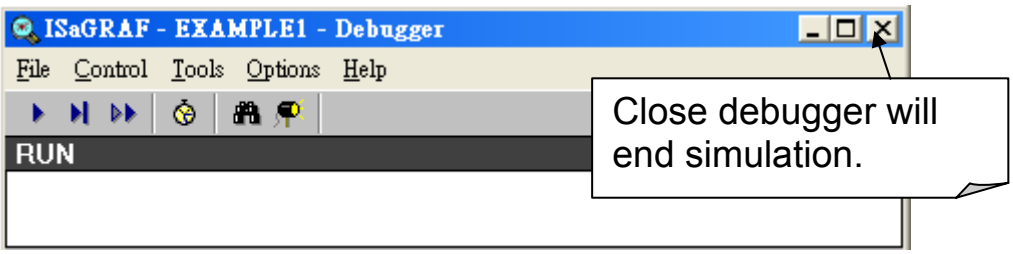

2.5 Step 5 - Download & Debugging the Example Project

To begin this process, please install the hardware as below.

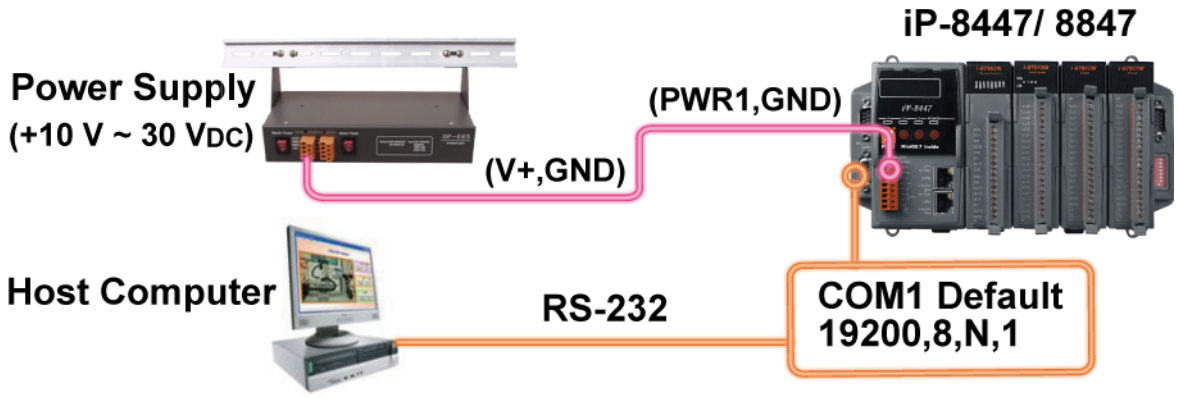

The RS-232 cable (CA-0915) is coming with the iP-8447/8847 controller; it is for linking PC's COM1 or COM2 to controller's COM1.

Please click on the "Link Setup" icon in the "ISaGRAF Programs" window.

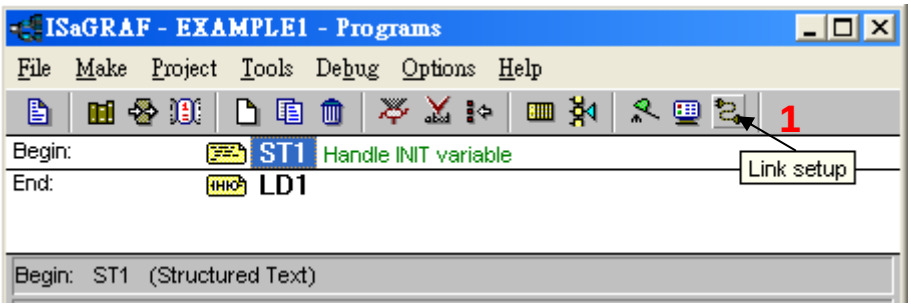

When you click on the "Link Setup" icon, the following window will appear. Please set the proper value.

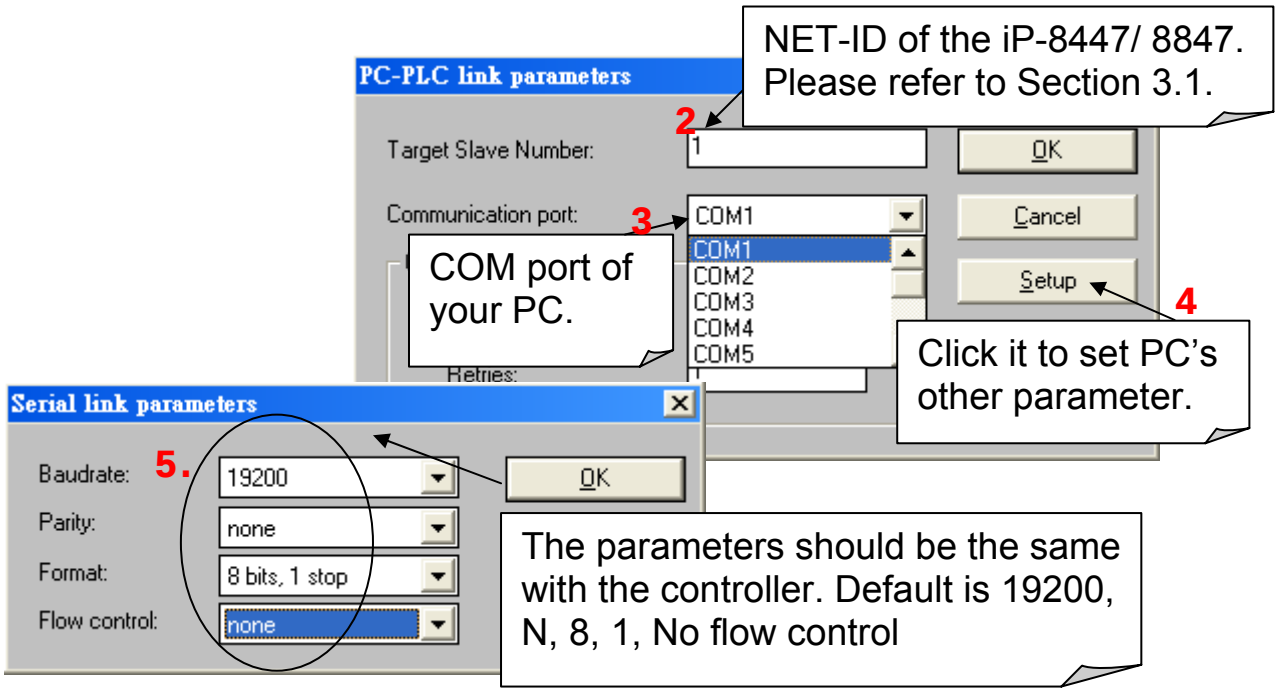

The communication parameters for the target iP-8447/8847 controller MUST be set to the same serial communication parameters for the development PC. For iP-8447/8847 controllers (serial port communications), the default parameters for COM1 (RS-232) and COM2 (RS-485) Ports are:

Baud rate:	19200
Parity:	none
Format:	8 bits, 1 stop
Flow control:	none

2.5.1 Downloading the Project

Before you can download the project to the iP-8447/8847 controller system, you must first verify that your development PC and the controller system are communicating with each other. To verify proper communication, click on the "Debug" icon in the "ISaGRAF Programs" window as shown below.

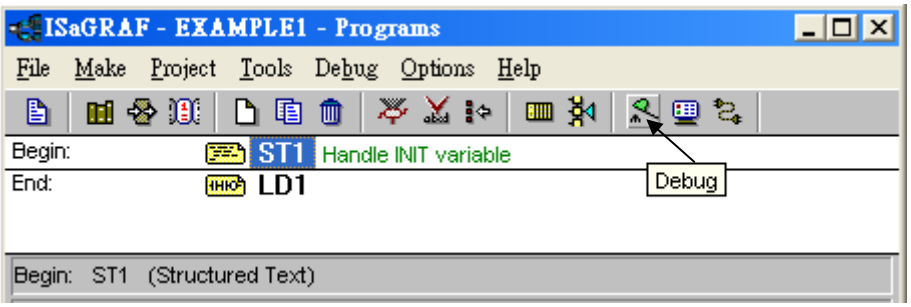

If the development PC and the iP-8447/8847 controller system are communicating properly with each other, the following window displayed below will appear. (or if a program is already loaded in the controller system, the name of the project will be displayed with the word "Active" following it.)

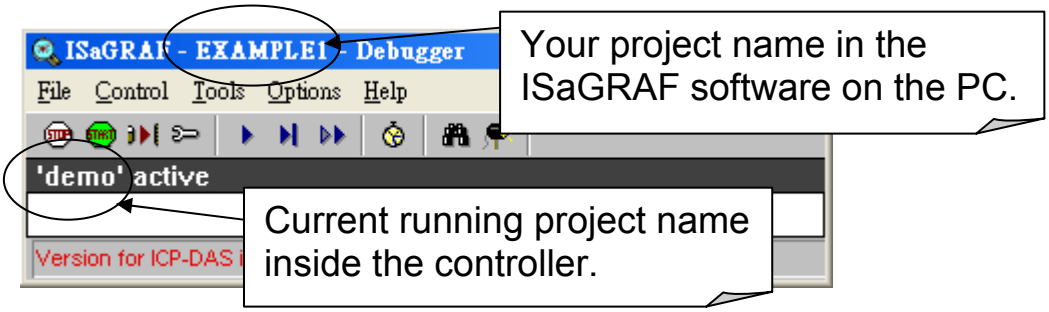

If the message in the "ISaGRAF Debugger" says "Disconnected", it means that the development PC and the controller system have not established communications with each other.

The most common causes for this problem is either the serial port cable not being properly configured, or the development PC's serial port communications DO NOT match that of the iP-8447/8847 controller system.

You may have to either change the serial port communication settings for the development PC (which may require changing a BIOS setting) or change the "Serial Link Parameters" in the ISaGRAF program.

If there is a project already loaded in the controller system you will need to stop that project before you can download the example project. Click on the "STOP" icon as illustrated below to halt any applications that may be running.

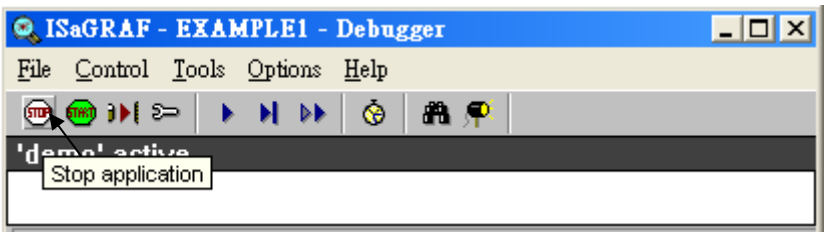

Starting the Downloading Process

From the "ISaGRAF Debugger" window click on the "Download" icon, then click on "ISA86M: TIC Code for Intel" from the "Download" window as shown below.

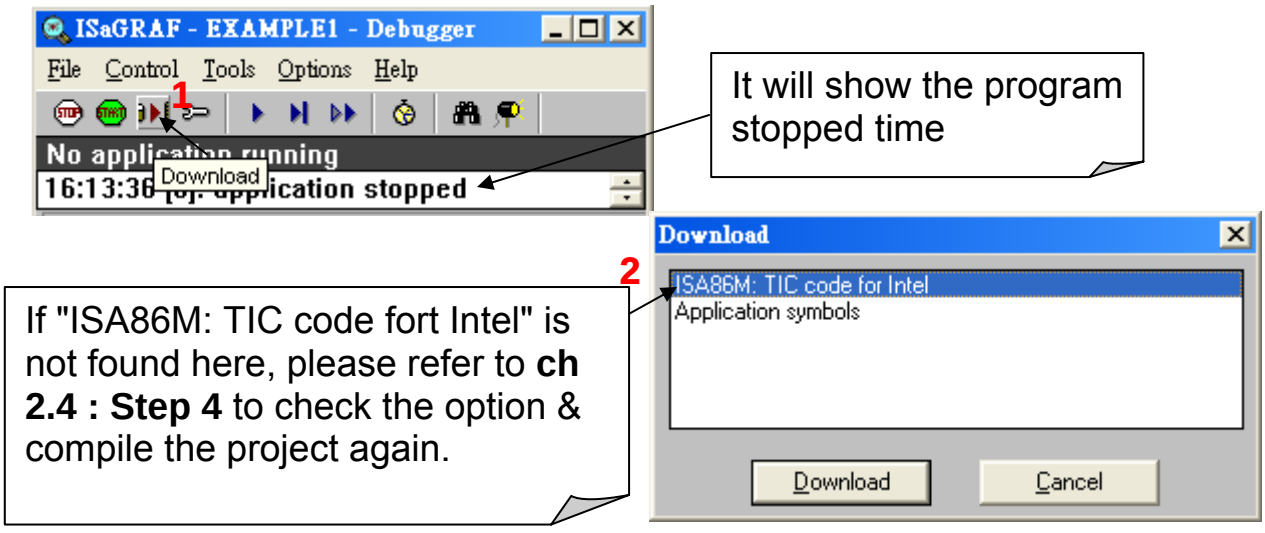

The example project will now start downloading to the iP-8447/8847 controller system. A progress bar will appear in the "ISaGRAF Debugger" window showing the project downloading progress.

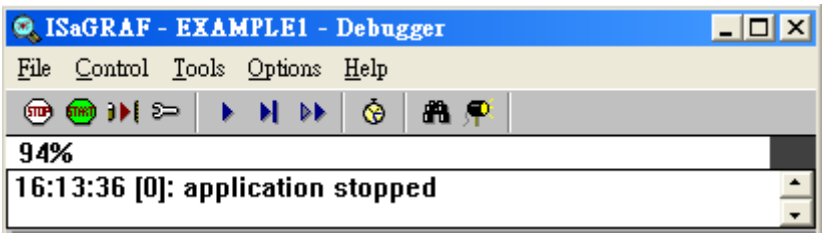

When the example project has successfully completed the downloading process to the iP-8447/8847 controller system the following two windows will appear.

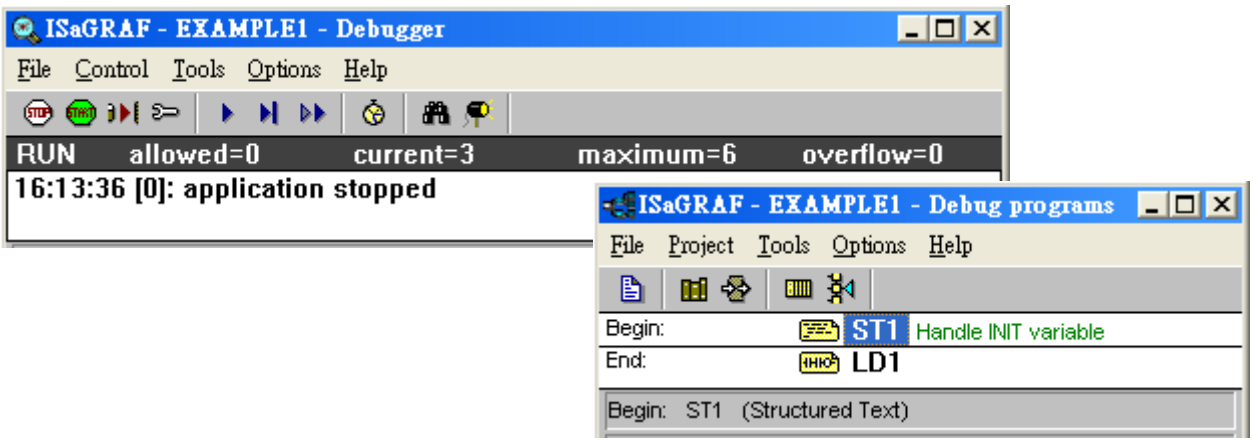

2.5.2 Running the Example Program

You can observe the real time I/O status from several ISaGRAF windows while you are running the example project. One of the windows is the "I/O Connection" window, which shows each of the inputs and outputs as assigned.

Click on the "I/O Connection" icon in the ISaGRAF Debugger window to open the "I/O Connection" screen.

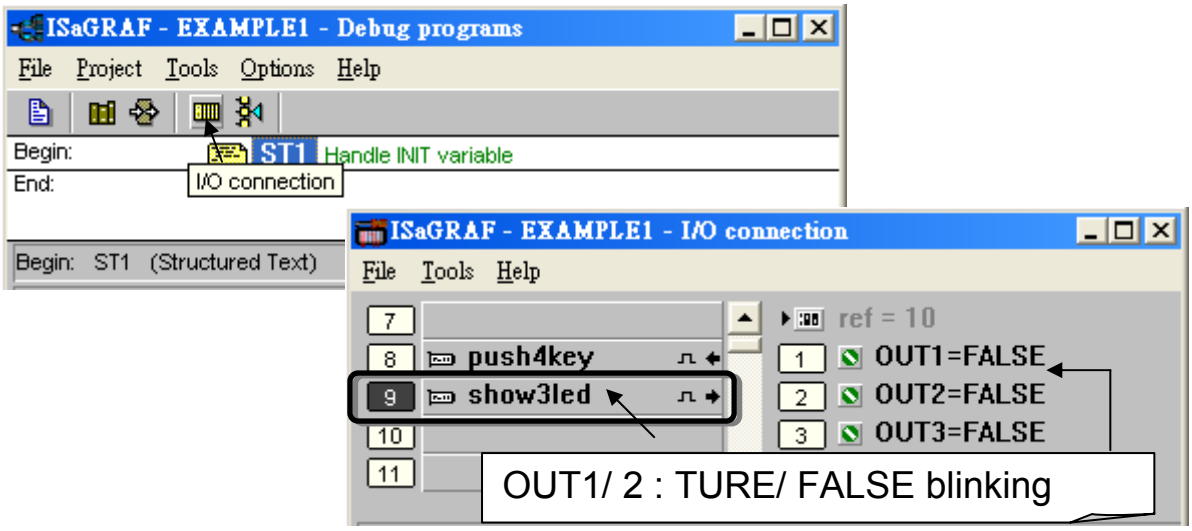

Another VERY helpful window you can open is the "Quick LD Program" window. From this window you can observe the LD program being executed in real time. You may push the first button and second button on the front panel of the iP-8447/8847 controller to test it.

Though there are numerous steps involved in creating and downloading an ISaGRAF program, each step is quick and easy to accomplish, and the end result is a powerful and flexible control development environment for the iP-8447/8847 controller systems.

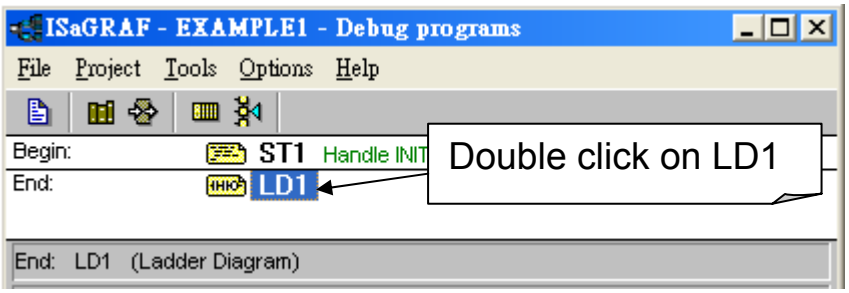

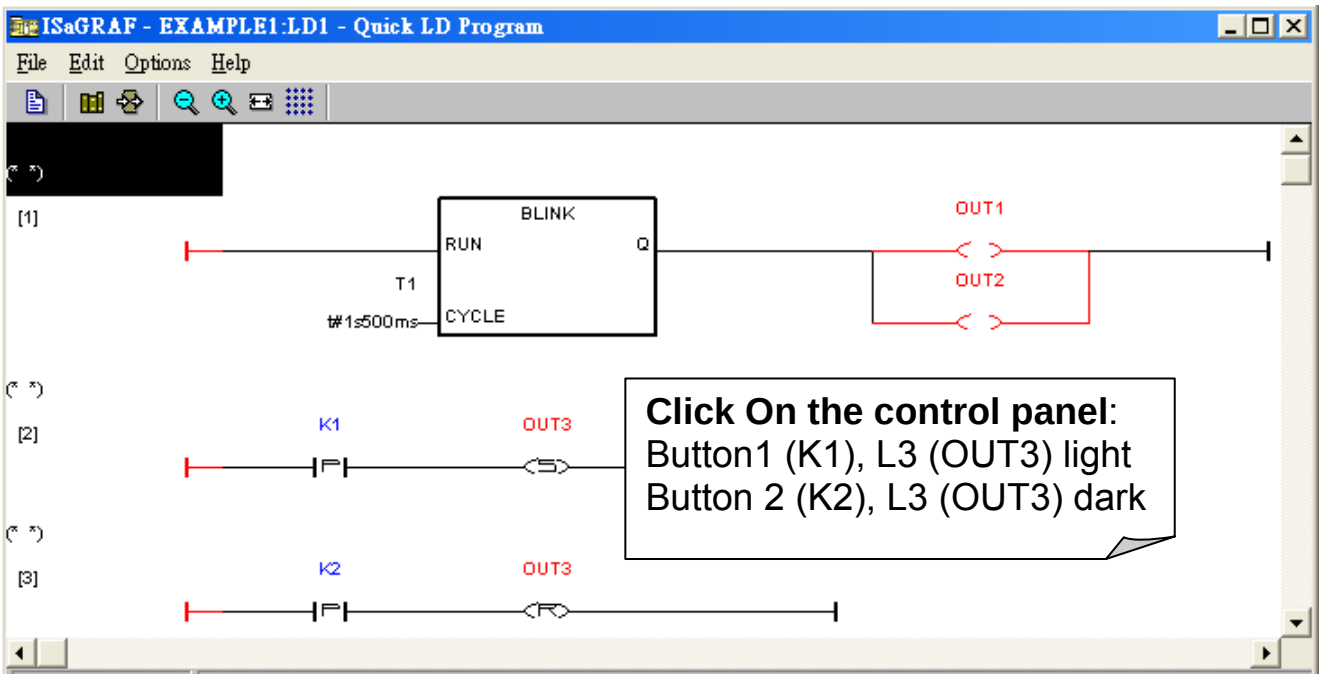

PRACTICE, PRACTICE, PRACTICE!

Now that you have successfully created and ran your first ISaGRAF program with the iP-8447/8847 controller system, you should practice creating more elaborate and powerful programs. Like any other computer development environment, practice and experimentation is the key to understanding and success, GOOD LUCK!

2.6 Demo Programs List

2.6.1 iP-8447/8847 Demo Program List:

www.icpdas.com > Products > Software > ISaGRAF > Demo files

Project Name	Description	I/O Boards Or Complex Equipment Used
Demo_01	Timer Control	Push4Key Show3Led
Demo_01a	To do something at some sec later when an event happens	Push4Key Show3Led
Demo_02	Start, Stop, & Reset Timer	Push4Key Show3Led
Demo_03	R/W System Date & Time. To output at a scheduled time interval, For ex. Monday, 09:00 ~ 18:00, Sunday, 10:00 ~ …	
Demo_04	Calculate Empty Cycle Time	
Demo_05	Blinking Output	Push4Key Show3Led
Demo_06	Change Output Mode	Push4Key Show3Led
Demo_07	Show A Value To S-MMI	Push4Key Show3Led
Demo_08	Input A Value To S-MMI	Push4Key Show3Led
Demo_09	Integer Calculation	
Demo_10	Display Analog Input Value To S-MMI	I-87017W I-87024W Push4Key
Demo_11a	Fbus Master, NET_ID = 1	Fbus_m Push4Key Show3Led
Demo_11b	Fbus Slave, NET_ID = 2	Fbus_s Push4Key
Demo_12	Use COM3 To Receive User-Defined Command From PC	Show3Led

Project Name	Description	I/O Boards Or Complex Equipment Used
Demo_13	Send User-Defined Data To PC Via COM3 Every 3 Seconds	I-87017W
Demo_14	Convert I-7000 & I-87K Protocol To Modbus Protocol	Bus7000
Demo_15a	Link To Other Modbus Devices	Mbus
Demo_15b	Simulate iP-8447 As A Modbus Device For Demo_15a To Link To This Project	None
Demo_16	Periodic Pulse Generation, And Send Modbus Commands To Another Controller	Push4Key Mbus
Demo_17	Read/Write EEPROM	
Demo_18	PID control	
Demo_21	Write one string to COM5 & COM6	Push4Key Show3Led
Demo_22	Receive message and echo back to COM5 or COM6	Show3Led
Demo_23	Receive a user defined protocol from PC	Show3Led
Demo_27	Motion x, slot 0: I-8091W, Slot 1 : I-8090W, Napdos\ISaGRAF\8000\Driver\motion.pdf	I-8091W I-8090W Show3Led
Demo_27a	Motion x, slot 0 : I-8091W, Napdos\ISaGRAF\8000\Driver\motion.pdf	I-8091W Show3Led
Demo_28	Motion x-y, slot0 : I-8091W, slot1 : I-8090W, Napdos\ISaGRAF\8000\Driver\motion.pdf	I-8091W I-8090W Show3Led
Demo_29	Store 1200 short-int values every 75 sec. and then send to PC via COM3	I-87017W
Demo_30	Store 2880 short-int values every 18 sec. and then send to PC via COM3	I-8017W
Demo_31	Press push button 1 to send an email from COM4 of iP-8x47 controller	Push4Key
Demo_32	Press Push button 1 or 2 or 3 to send emails to two users with multi-buffers	Push4Key
Demo_33	R/W user defined protocol via COM3	Show3Led
Demo_34	ISaGRAF Spotlight Demo	Push4Key Show3Led

Project Name	Description	I/O Boards Or Complex Equipment Used
Demo_35a	Time Synchronization : SA Update Date & Time at this controller will synchronize date & time at SB	Fbus_m
Demo_35b	Time Synchronization : SB	Fbus_s
Demo_36	Get driver version of iP-8x47	
Demo_37	Spotlight demo	Push4Key Show3Led
Demo_38	iP-8x47 talks to the MMICON : Demo 1	MMICON
Demo_39	iP-8x47 talks to the MMICON : Demo 2	MMICON
Demo_40	store 8 A/I (binary) to Dual Battery Backup SRAM per min, then PC can load it by "ICPDAS UDloader"	I-8017W Show3Led
Demo_41	Record Alarm (text) to Dual Battery Backup SRAM & PC can load it by "ICPDAS UDloader"	Show3Led
Demo_42	store 8 A/I (text) to Dual Battery Backup SRAM per min, then PC can load it by "ICPDAS UDloader"	I-8017W Show3Led
Demo_43	SMS demo, Please declare your own phone No. in the dictionary, message type	SMS Show3Led Push4key
Demo_44	Demo of PC to download data to the Dual Battery Backup SRAM	Show3Led
Demo_46	Motion control : Pulse move at a specified speed	I-8091W I-8090W Push4Key
Demo_49a	Redundant : iP-8447/8847 Redundant Master	Bus7000 Ebus_m
Demo_49b	Redundant : iP-8447/8847 Redundant Slave	Bus7000 Ebus_s
Demo_50	PWM I/O demo. (Pulse Width Modulation)	I-8055W
Demo_52	Parallel D/I counter demo 1 at slot 0 (Counter Value is retained in this demo)	I-8051W Push4Key
Demo_53	Parallel D/I counter demo 2 at slot 0 (high speed near 1K) (Not retained)	I-8051W I-8056W Push4key

Project Name	Description	I/O Boards Or Complex Equipment Used
Demo_54a	Modbus Master	Mbus Push4key
Demo_54b	Modbus Slave	
Demo_55	PWM I/O demo 2. (Pulse Width Modulation)	I-8055W
Demo_58	Stepping motor controller	Push4key I-8041W
Demo_59	Stepping motor controller	Push4key I-8041W
Demo_61	DI counters using DI_CNT, iPAC-8xx7 + 8051 Do something when DI signal happens	I-8051W
Demo_63	PWM & DI_CNT demo, ON & OFF time can be dynamically changed	I-8055W
Demo_70	Send string to COM3 when alarm 1 to 8 happens (Access to variables as array)	Slot 1 : I-8055W

NOTE:
Demo_18 uses PID_AL which is provided by CJ Company for evaluation. Please refer to
ftp://ftp.icpdas.com/pub/cd/8000cd/napdos/isagraf/8000/english_manu/pid_al.complex_pid_algorithm_implementation.pdf

2.6.2 VB .NET 2005 and VB 6.0 Modbus TCP/IP Protocol Demo Program

1. PC with MS .NET frame work 2005 installed can run this VB .NET 2005 (MBTCP_demo) program to use Modbus TCP/IP protocol to link to ICP DAS controllers. Please refer to

   http://www.icpdas.com/faq/isagraf.htm
   http://www.icpdas.com/faq/isagraf/051.htm

2. PC can run this VB 6.0 (demo_3) program to use Modbus TCP/IP protocol to link to ICP DAS controllers. Please refer to

   http://www.icpdas.com/faq/isagraf.htm
   http://www.icpdas.com/faq/isagraf/052.htm

2.6.3 ISaGRAF Demo Example Files

http://www.icpdas.com/products/PAC/i-8000/isagraf_demo_list.htm

Chapter 3 Hardware System & Setting

Please refer to CD-ROM: \napdos\isagraf\8000\english_manu\ "user_manual_i_8xx7.pdf" for detailed ISaGRAF User's Manual.

3.1 Setting the NET-ID for the iP-8447/8847

For the iP-8447/8847 to properly operate, it must first be addressed correctly.

Hex.	DIP Switch	1	2	3	4	5	6	7	8
NET-ID=00	ON 1 2 3 4 5 6 7 8								
NET-ID=01	ON 1 2 3 4 5 6 7 8	**ON**							
NET-ID=02	ON 1 2 3 4 5 6 7 8		**ON**						
NET-ID=03	ON 1 2 3 4 5 6 7 8	**ON**	**ON**						
NET-ID=04	ON 1 2 3 4 5 6 7 8			**ON**					
⋮									
NET-ID=FE	ON 1 2 3 4 5 6 7 8		**ON**	**ON**	**ON**	**ON**	**ON**	**ON**	**ON**
NET-ID=FF	ON 1 2 3 4 5 6 7 8	**ON**	**ON**	**ON**	**ON**	**ON**	**ON**	**ON**	**ON**

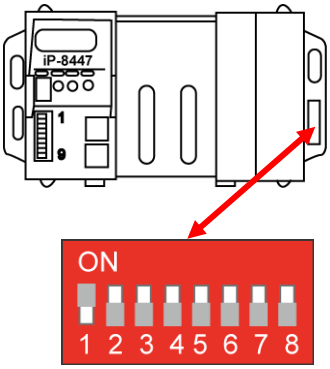

Default setting → NET-ID=01

★ For ISaGRAF workbench , it can only recognize NET-ID from 01 to FF (1~255).

★ The NET-ID of every Main Control Unit in the same network must be unique (different from each other).

The Net-ID is expressed as Hexadecimal (Hex) and the DIP 1 to 8 were expressed as 2^0 ~ 2^7，If Net-ID=**01** (2^0=1)，please setup the DIP**1** to ON。If Net-ID=**02** (2^1=2)，please setup the DIP**2** to ON。If Net-ID=**03** (2^0+2^1=3)，please setup the DIP **1**、**2** to ON 。If Net-ID=**04** (2^2=4)，please setup the DIP **3** to ON 。If Net-ID=**05** (2^0+2^2=5)，please setup the DIP **1**、**3** to ON。If Net-ID=**FE**$_{(16)}$= 254$_{(10)}$ (2^1+2^2+2^3+2^4+2^5+2^6+2^7=254)，please setup the DIP **2** ~ **8** to ON 。If Net-ID= **FF**$_{(16)}$= 255$_{(10)}$ (2^0+2^1+2^2+2^3+2^4+2^5+2^6+2^7=255)，please setup the DIP **1** ~ **8** to ON 。

DIP 1	2	3	4	5	6	7	8
2^0=1	2^1=2	2^2=4	2^3=8	2^4=16	2^5=32	2^6=64	2^7=128

3.2 Connecting PC to the iP-8447/8847's COM1

When you receive your iP-8x47controller, there is one RS-232 communications cable (CA-0915) provided with the system. The cable is used to connect your PC to the iP-8447/8847 or to an I-7520R (RS-232/485 converter) that can be purchased from ICP DAS.

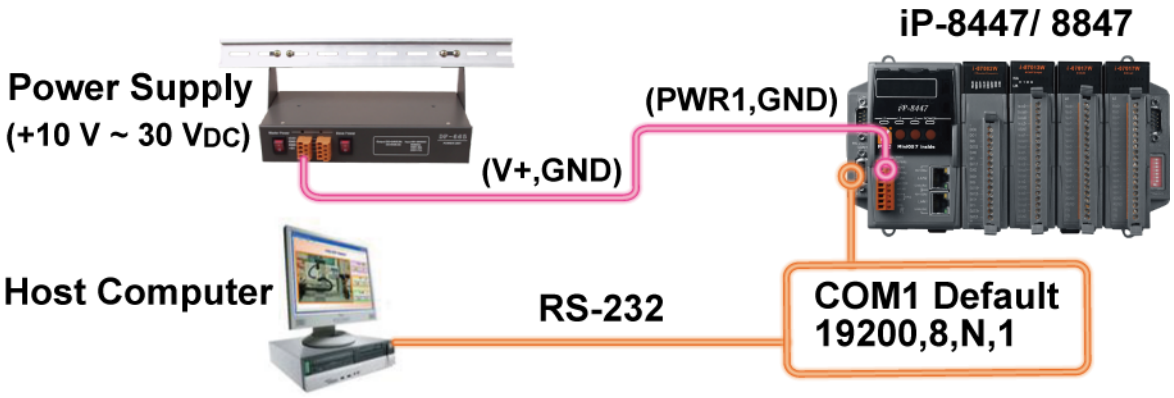

The communication parameters for the iP-8447/8847 COM1 Port is set to 19200 baud rate, 8 data bits, no stop bits, and one parity bit ("19200, 8, N, 1") by default. Normal RS-232 Pin Wiring Assignments

PC 9-Pin D-Sub		iP-8x47 COM1
RxD 2	———	TxD 2
TxD 3	———	RxD 3
GND 5	———	GND 5

For the ISaGRAF Workbench RS-232 communications to operate properly, only the RxD, TxD, and the GND signals are used. If your PC is running a hardware device or software program that uses the CTS and DSR signals, you will need to wire the RTS-CTS and DTR-DSR signals together as shown below.

PC 9-Pin D-Sub		iP-8x47 COM1
RxD 2	———	TxD 2
TxD 3	———	RxD 3
GND 5	———	GND 5
DTR 4	┐	
DSR 6	┘	
RTS 7	┐	
CTS 8	┘	

3.3 Connecting PC to iP-8447/8847's COM2

If your PC is connecting to an iP-8447/8847 COM2 Port (RS-485), the maximum distance between the I-7520R (the RS-232/RS-485 converter) and the iP-8447/8847 controller is up to 1,200 meters (4,000 feet). The distance between these two is dependent on the baud rate; the rule to follow is the lower you set the baud rate, the longer the distance can be.

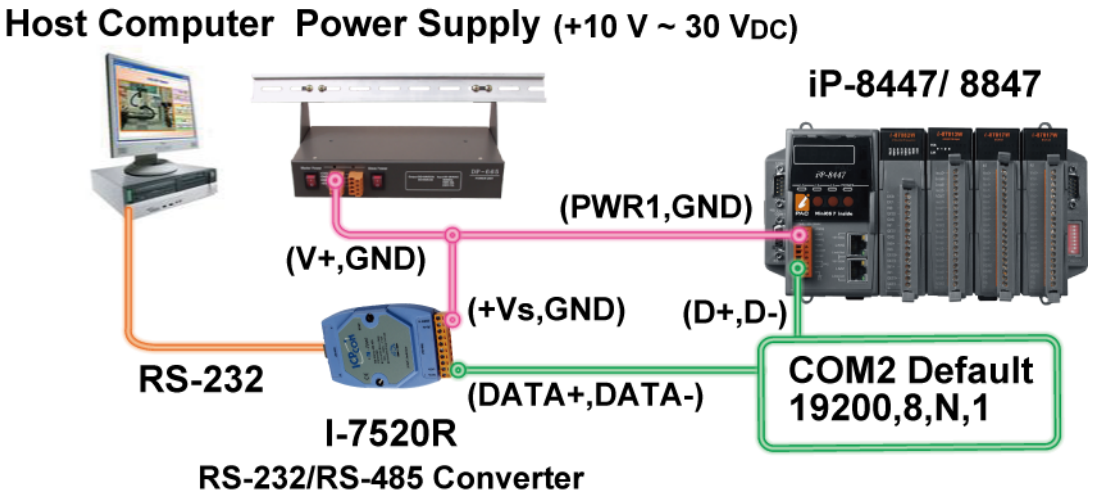

3.4 Connecting PC to Several iP-8447/8847's COM2

An additional feature of using the COM2 Port of the iP-8447/8847 is that you can configure an RS-485 network from one PC to link to numerous iP-8447/8847 controllers. The PC can download ISaGRAF applications to each controller on the RS-485 network. The maximum number of controllers that can be networked via the RS-485 network is 255 (Not recommended to use so many).

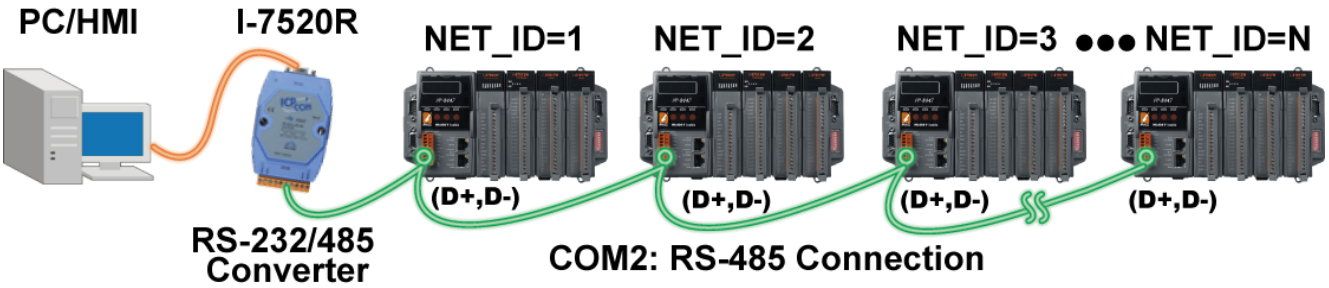

To create an RS-485 network you must first insure that each iP-8447/8847 controller has a unique NET-ID address, and each of the COM2 on controllers link the "D+" to the "D+" signal and the "D-" to the "D-" signal.

It is recommended to add two terminal resistors (try 220Ω, then 110Ω, and then 330Ω if the RS-485 communication is not stable) on the nearest iP-8x47 and farthest iP-8x47 for long distance RS-485 connection.

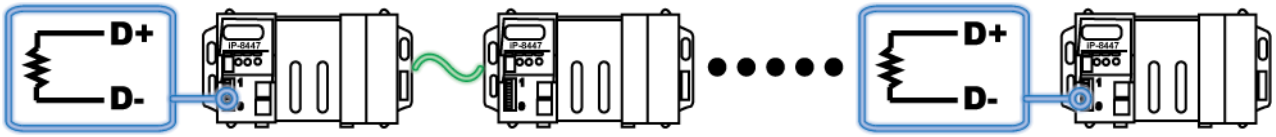

3.5 Setup COM Port's Baud rate & Non- Modbus Slave Port from Controller

In this section, you can setup the baud rate of COM1/2/3. When you choose one of the baud rates that is mean this COM Port is a Slave Port. You can also setup the COM2/3 as non-Modbus Slave Port from control panel.

The ports which support Modbus Slave (Default baud rate setting: 19200)

COM1 (RS-232) and One of the COM2 (RS-485),
COM3 (RS-485/RS-232, Default: Non- Modbus Slave Port)

The baud rate can be set between 300、600、1200、2400、4800、9600、19200、38400、57600、115200 bps (bit per second).

To change the baud rate setting on the COM1/COM2/COM3 Port, first power off the iP-8447/8847controller. Then press and hold on the **first two buttons** on the front panel of the controller and then power back up the controller system as shown below.

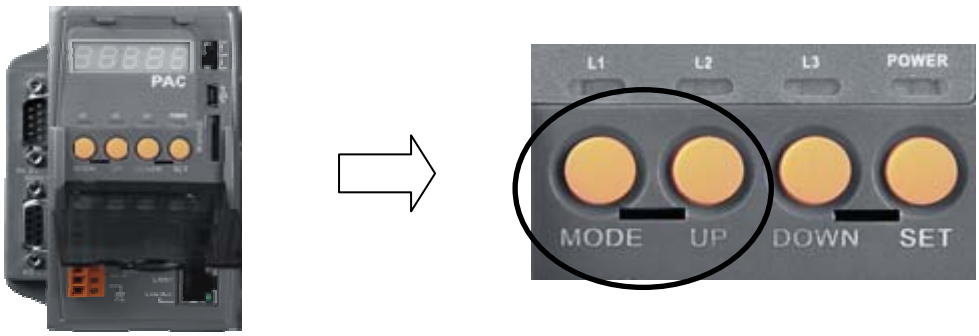

Until the "SEL 1" (Select 1) show on the LED display. On ISaGRAF controller, the definition of buttons shown as following diagram.

The button will be ineffectively (L1 turn off) after one minute if you don't have any setup. Please follow the former step and reboot the controller.

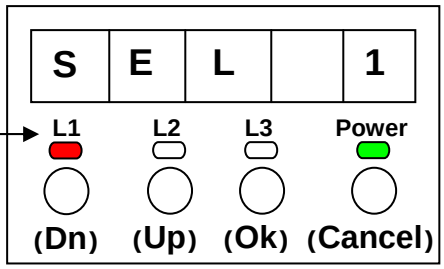

Note: In iP-8447/8847 controller, "SEL 0" is to set the first Slave Port : COM1's baud rate, while "SEL 1" is to set the second Slave Port : COM2 or COM3's baud rate).

<u>Setup COM1's baud rate:</u>

1. Please press the "Up" button to change the selection to "SEL 0", and then press the "OK" button, the "BAU 4" setting will appear.
2. You can press "Up" or "Dn" to change the baud rate setting. The settings as below: (0) 1200, (1) 2400, (2) 4800, (3) 9600, (4) 19200, (5) 38400, (6) 57600, (7) 115200, (8) 300 (9) 600

3. Please press "OK" to save. It will show the COM1's communication mode (RS-232) and return to the COM Port selection mode (the screen of SEL 0"), please reboot the controller to load the settings.

Setup COM2/COM3's baud rate:

1. As above-mentioned, you can press the "Dn" button to change the selection to "SEL 1", and then press the "OK" button.
2. COM2 & COM3 have a common setup screen, because of you can only setup one of COM 2 or COM 3 at the same time. The settings as below:

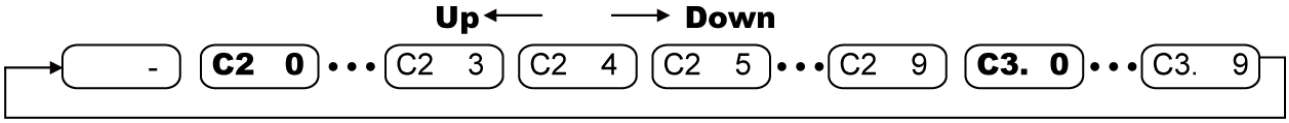

(a) COM2

At first, you will see "C2 4" on LED display. It means "COM2: 19200", You can press "Up" or "Dn" to change the baud rate settings. The settings as below: (-) non-Modbus Slave Port (0) 1200, (1) 2400, (2) 4800, (3) 9600, (4) 19200, (5) 38400, (6) 57600, (7) 115200, (8) 300 (9) 600

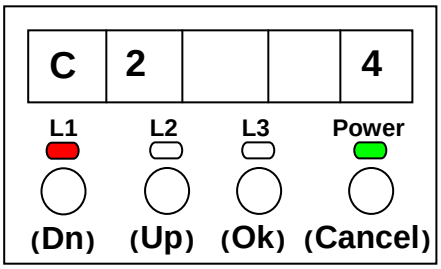

(b) COM3

As previous, you can press "Dn" several times to change the selection to "C3. 0" (COM3:1200). You can also press "Dn" to change the baud rate settings. The settings as below: (0) 1200, (1) 2400, (2) 4800, (3) 9600, (4) 19200, (5) 38400, (6) 57600, (7) 115200, (8) 300 (9) 600 (-) non-Modbus Slave Port

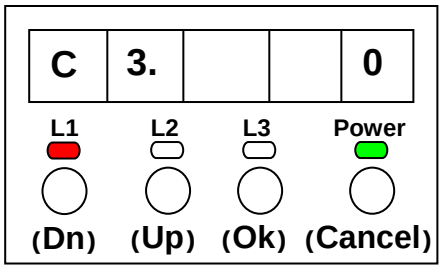

3. Please press "OK" to save. It will show the COM Port's communication mode (COM2: RS-485, COM3: RS-232/485) and return to the COM Port selection mode, please reboot the controller to load the settings.

Setup COM2/COM3 as non-Modbus Slave Port:

As previous, when you choose the "(-) non-Modbus Slave Port" that is mean both COM2 and COM3 were setup as non-Modbus Slave Port. Lastly, please reboot the controller.

The ISaGRAF workbench's default setting for PC's COM1 ~ 9 is 19200, 8, N, 1. If you have changed the iP-8447/8847 COM1/2/3's baud rate to other value. You should change your ISaGRAF Workbench's COMM. to the same setting before they can link to each other. (Please refer to Section 2.5)

3.6 Deleting an ISaGRAF Project from the Controller

There may be some reason you need to delete the ISaGRAF program from the controller. TO begin this, as the way you change the baud rate before, please shut down the power of controller, and then press and hold on the first two buttons until reboot the power and enter the setup mode.

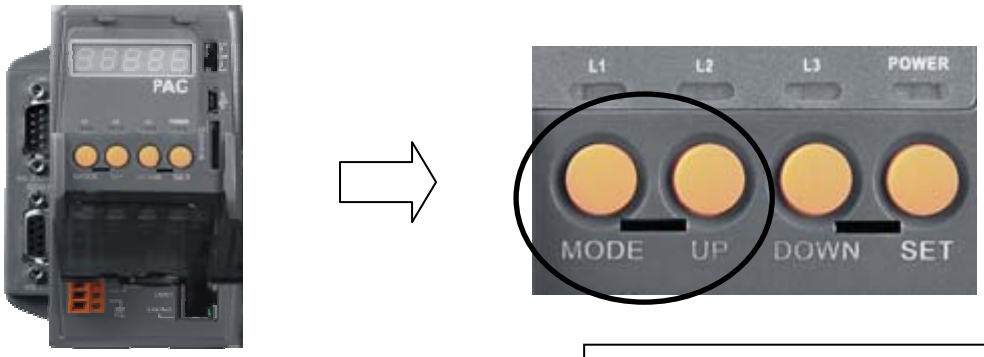

At first, you will see "SEL 1" on LED display. Please press the "Dn" button until "SEL 2" (Select 2) appears, and then press "OK" button.

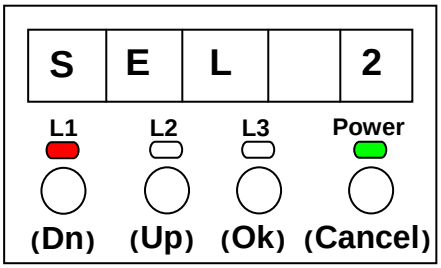

Now, the "dEL n" will show on LED display. Please press the "Up" or "Dn" buttons until "dEL y" appears, and then press "OK" button.

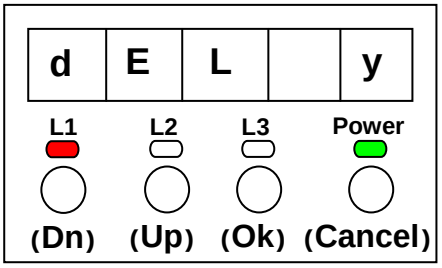

When you see "CLEAr" appear, you have deleted the currently installed ISaGRAF project from the controller system. Lastly, please reboot the controller.

3.7 Connecting PC to the iP-8447/8847 Ethernet Port

The iP-8447/8847 controller systems feature a built in Dual Ethernet Port. You can use LAN1 or LAN2 to connect with the PC.

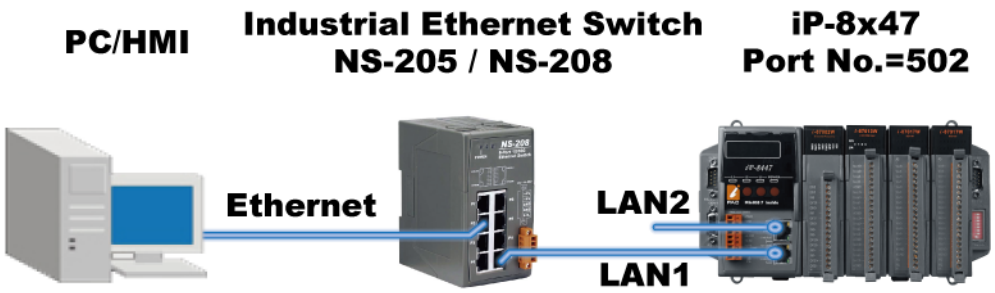

Before you can download an ISaGRAF application to the iP-8447/8847 controller using the Ethernet Port, you must first setup the Ethernet Port to properly communicate with the host PC. (Set IP, Mask and Gateway address, please refer to section 3.9 to do this setting.)

On your PC:
First open an ISaGRAF project and select a program you wish to communicate between your PC and the iP-8447/8847 controller system. Next, select the "Link Setup" button on the project screen as shown below.

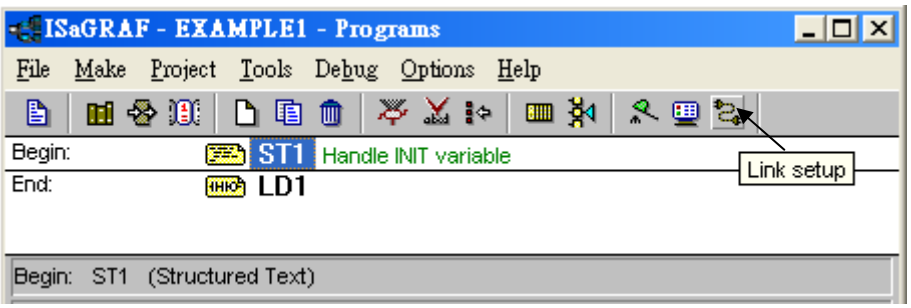

A "PC-PLC Link Parameters" dialog box will appear as shown below. From here select the "Ethernet" communications option and click on the "Setup" button.

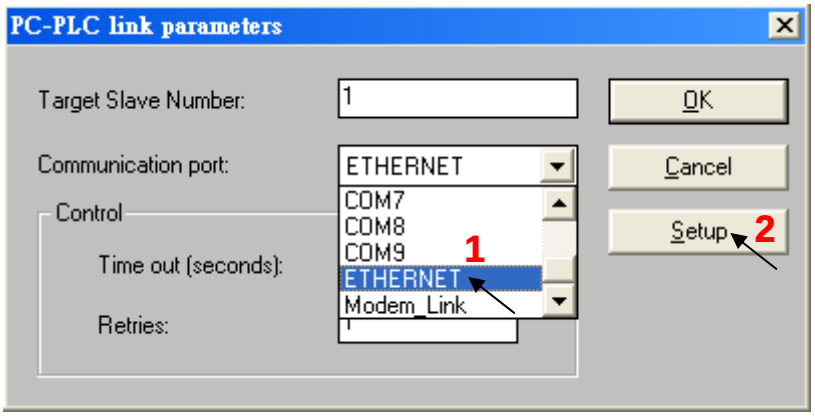

Once you have clicked on the "Setup" button, an "Ethernet Link Parameters" dialog box will appear. Set the "Port Number" to "502" and enter in the Internet address (IP) of the iP-8447/8847 controller, please refer to section 3.9.

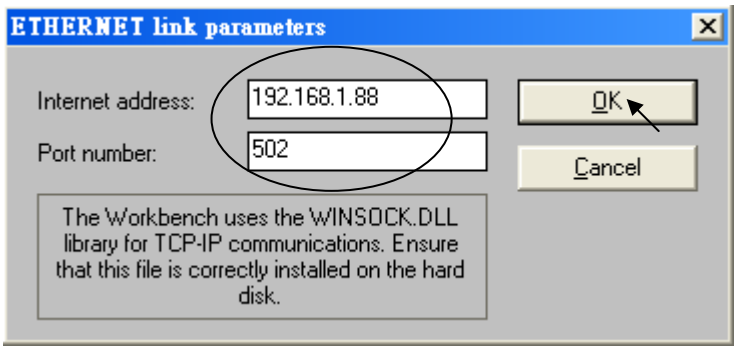

Once you have entered the appropriate information, click on the "OK" button, and now you have configured your PC to communicate with the iP-8447/8847 through the Ethernet Port.

Click on "Debug" to link to the controller.

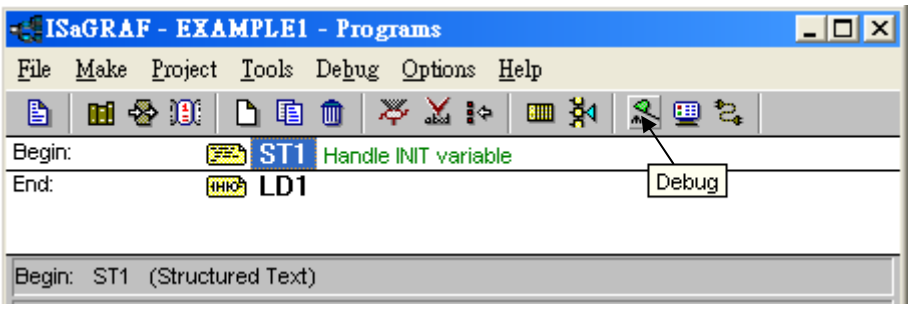

As follows diagram, the program is running now. (If appear "No application running" to indicate your controller didn't download any program, please refer to 2.5.1 sections to download the program needed).

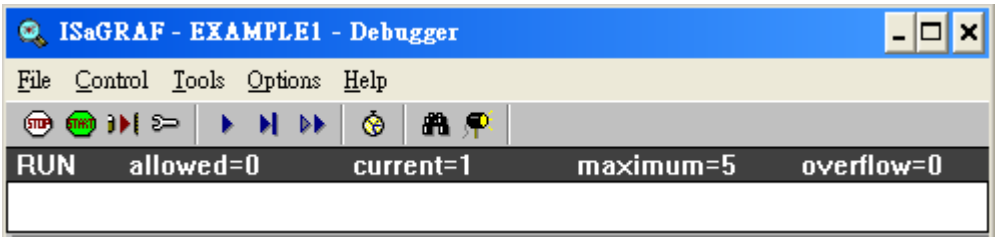

3.8 Modbus Slave Connection to the iP-8447/8847

iP-8447/8847 can use COM1 (RS-232) and one of COM2 (RS-485), COM3 (RS-232/485) to connect. The COM1/2 of the iP-8447/8847 controller supports Modbus RTU Slave protocol by default. They can be linked by ISaGRAF Workbench or by HMI devices or by SCADA software as diagram below:

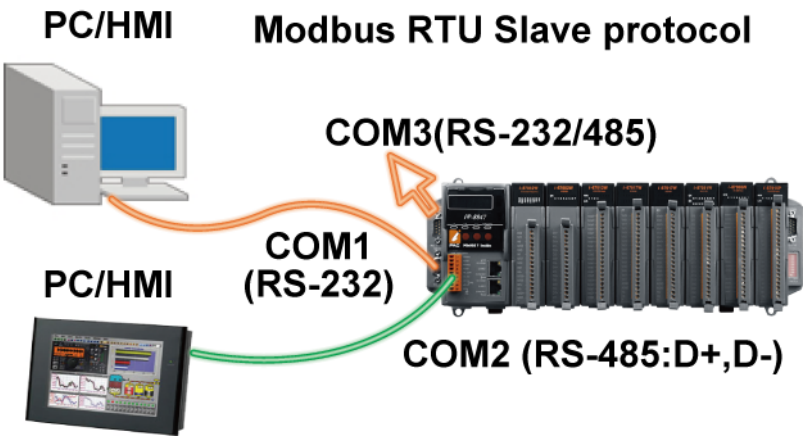

The Ethernet Port of the iP-8447/8847 controller supports Modbus TCP/IP Slave protocol. They can be linked by ISaGRAF Workbench or by HMI devices or by SCADA software. As diagram below:

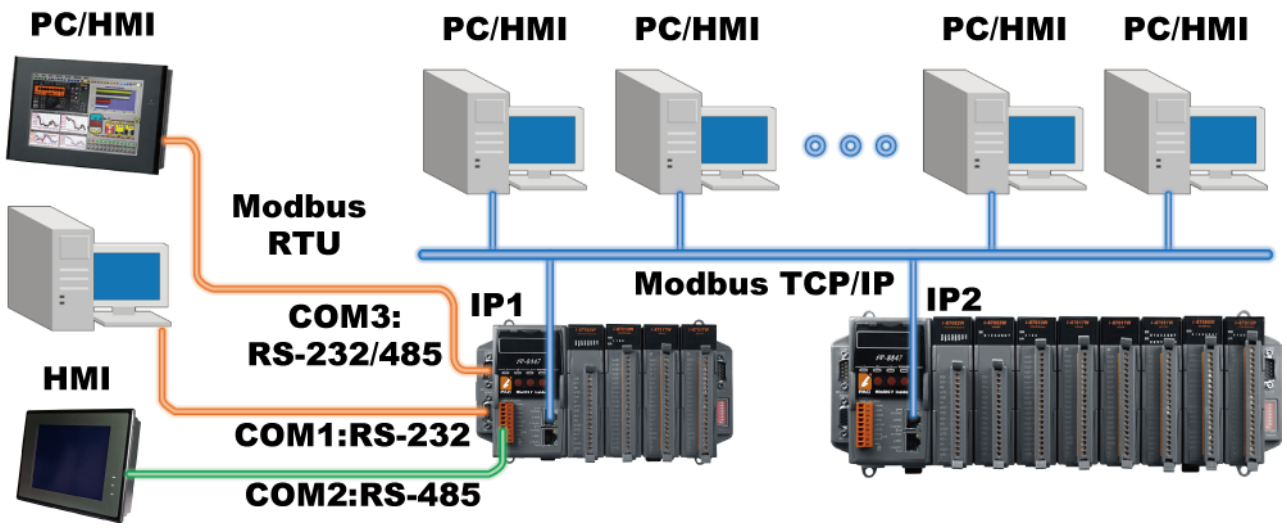

The Modbus TCP/IP protocol's Ethernet Port No. is fixed as **502.** Up to **6** PCs can link to one iP-8447/8847 throughout Ethernet Port. Another PC or HMI can link to COM1: RS-232 Port or one of COM2: RS-485, COM3: RS-232/485 (Modbus RTU Slave protocol) of the controller. Therefore the maximum number of clients can be linked is 8.

3.9 Setting iP-8447/8847's IP & MASK & Gateway

Create a file folder named "ip8000" in your hard drive. For example, "c:\ ip 8000".

1. Copy CD-ROM: \napdos\isagraf\ip8000\driver\1.xx\7188xw.exe, 7188xw.ini from the CD_ROM into your "ip8000" folder.
2. Run "\ip8000\7188xw.exe" in your hard drive. A "7188xw" screen will appear.
3. Link from COM1 or COM2 of PC to COM1 of the iP-8447/8847 controller by a RS-232 cable (CA-0915). If you use other COM Port (ex.COM5), please refer to ch3.11 step4.
4. Power off the iP-8447/8847 controller, change the DIP switch on controller panel to the "Init", then power it up.
5. If the connection is OK, the "C837_V2.2_UDP>" messages will appear on the 7188xw screen. (If you run "7188xw" after the controller power on, please press "Enter" on keyboard to start the setup)

```
ICP_DAS MiniOS7 for iPAC-8000E(80MHz) Ver. 2.04 build 007,May 23 2008 14:23:49
OS id=25
SRAM:768K, FLASH MEMORY:512K
[CPU=ICPDAS R2240I]
CPU internal WDT is ENABLED(WDT timeout=0.8 sec)
Serial number= 01 08 99 31 11 00 00 FE

C837_V2.2_UDP>
```

6. Using your PC's "Command Prompt" to search out the IP segment, and then according it to setup the IP/IP2/MASK/MASK1/Gateway/Gateway2 of the controller.

"**IP2**" means the upper Ethernet Port on control panel (LAN2)

"**IP**" means the lower Ethernet Port on control panel (LAN1)

On PC, you can press "Start" > "All Programs" > "Accessories" > Run "Command Prompt" > enter in "ipconfig" to know the network settings.

```
Microsoft Windows XP [Version 5.1.2600]
(C) Copyright 1985-2001 Microsoft Corp.

D:\Documents and Settings\Janice>ipconfig

Windows IP Configuration


Ethernet adapter Local Area Connection 2:

        Media State . . . . . . . . . . . : Media disconnected

Ethernet adapter Local Area Connection:

        Connection-specific DNS Suffix  . :
        IP Address. . . . . . . . . . . . : 192.168.1.10
        Subnet Mask . . . . . . . . . . . : 255.255.255.0
        Default Gateway . . . . . . . . . : 192.168.1.1
```

7. Type "ip" or "ip2" to see the current LAN1 or LAN2's IP address
   Type "ip 192.168.1.xxx" or "ip2 192.168.1.xxx" to setup a new IP address

```
C837_V2.2_UDP>ip
IP=192.168.1.104
C837_V2.2_UDP>ip2
IP=10.0.0.104
```

```
C837_V2.2_UDP>ip 192.168.1.88
Set IP=192.168.1.88
[ReadBack]IP=192.168.1.88
C837_V2.2_UDP>ip2 192.168.1.89
Set IP=192.168.1.89
[ReadBack]IP=192.168.1.89
```

8. Type "mask" or "mask2" to see the current address mask of the iP-8x47.
   Type "mask 255.255.255.0" or "mask2 255.255.255.0" to setup a new address mask.

```
C837_V2.2_UDP>mask
Mask=255.255.255.0
C837_V2.2_UDP>mask2
Mask=255.255.255.0
```

9. Type "gateway" or "gateway2"o see the current gateway address.
   Type "gateway 192.168.1.1" or "gateway2 192.168.1.1" to setup a new gateway address.

```
C837_V2.2_UDP>gateway
Gateway=10.0.0.254
C837_V2.2_UDP>gateway2
Gateway=10.0.0.254
```

```
C837_V2.2_UDP>gateway 192.168.1.1
Set GATEWAY=192.168.1.1
[ReadBack]Gateway=192.168.1.1
C837_V2.2_UDP>gateway2 192.168.1.1
Set GATEWAY=192.168.1.1
[ReadBack]Gateway=192.168.1.1
```

10. Press **ALT_X** to exit "7188xw", or COM1/COM2 of the PC will be occupied.

11. Change the DIP switch on controller panel to "Run", and then reboot the iP-8x47 controller.
12. On PC, you can press "Start" > "Run…" > Input "cmd" to open the "Command Prompt" window, and then Input "ping …" (IP) to confirm the connection between PC and controller is well.

```
C:\WINDOWS\system32\cmd.exe
Microsoft Windows XP [版本 5.1.2600]
(C) Copyright 1985-2001 Microsoft Corp.

C:\Documents and Settings\User>ping 192.168.1.89

Pinging 192.168.1.89 with 32 bytes of data:

Reply from 192.168.1.89: bytes=32 time=1ms TTL=64
Reply from 192.168.1.89: bytes=32 time<1ms TTL=64
Reply from 192.168.1.89: bytes=32 time<1ms TTL=64
Reply from 192.168.1.89: bytes=32 time<1ms TTL=64

Ping statistics for 192.168.1.89:
    Packets: Sent = 4, Received = 4, Lost = 0 (0% loss),
Approximate round trip times in milli-seconds:
    Minimum = 0ms, Maximum = 1ms, Average = 0ms
```

3.10 Setting COM1 as None-Modbus-Slave Port

COM1 of the iP-8447/8847 supports Modbus RTU Slave protocol by default. User may change it to a None-Modbus-Slave Port for other usage. For example, user may write his own defined protocol on COM1 or use COM1 as a Modbus Master Port.

1. Create a file folder named "ip8000" in your hard drive. (Ex."c:\ip8000")
2. Copy CD-ROM: \napdos\isagraf\ip8000\driver\1.xx\7188xw.exe, 7188xw.ini ….. from the CD_ROM into your "ip8000" folder.
3. Run "\ip8000\7188xw.exe" in your hard drive. A "7188xw" screen will appear.
4. Link from COM1 or COM2 of PC to COM1 of the iP-8x47 by a RS-232 cable.
5. If you use other COM Port (ex.COM5), please refer to ch3.11 step4.
6. Power off the iP-8447/8847, change the DIP switch on control panel to "Init", and then power it up.
7. If the connection is OK, the "C837_V2.2_UDP>" messages will appear on the 7188xw screen. (If you run "7188xw" after the controller power on, please press "Enter" on keyboard to start the setup)
8. Type "isa_ip *f=1" to free COM1 (set COM1 as none-Modbus-Slave Port)

```
C837_V2.2_UDP>isa_ip *f=1

 Com1 is free now
```

9. Press ALT+X to exit "7188xw", or COM1/COM2 of the PC will be occupied.
10. Please change the DIP switch on control panel to "Run", then reboot the iP-8447/8847 controller.

If user wants COM1 to be back to a Modbus RTU Slave Port again, follow the former steps and then type "**isa_ip *f=0**". If the command doesn't support, please refer to the next section to update the hardware driver.

3.11 Update iP-8447/8847's Hardware Driver

Our newly released driver can also be obtained from the below website:
www.icpdas.com > Products > Software > ISaGRAF > Driver or
http://www.icpdas.com/products/PAC/i-8000/isagraf-link.htm
(Please extract the zip file)

To Know the Current Driver Version

1. Create a file folder named "ip8000" in your hard drive. (Ex."c:\ip8000")
2. Copy napdos\isagraf\ip8000\driver\1.xx\ ① **7188xw.exe,** ②**7188xw.f4,** ③**7188xw.ini,** ④**ip_080530.img,** ⑤**autoexec.bat,** ⑥**isa_ip.exe**, ⑦**isa_data.exe** from the CD_ROM into your "ip**8000**" folder.
3. Run "\ip8000\7188xw.exe" in your hard drive. A "7188xw" screen will appear (Press F1 for help).
4. Link COM1 or COM2 of your PC to COM1 of the controller through a RS-232 cable (CA-0915). If you use other COM Port (ex.COM5), please modify the first line of "7188xw.ini".

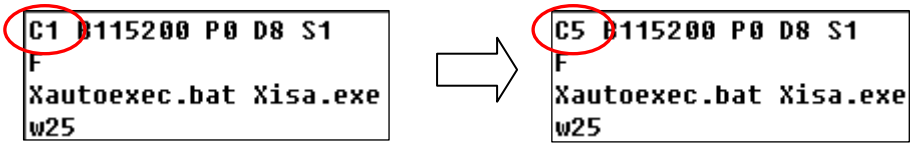

5. Power off the iP-8447/8847, change the DIP switch on control panel to "Init", and then power it up.
6. If the connection is OK, the "C837_V2.2_UDP>" message will appear on the 7188xw screen. (If you run "7188xw" after the controller power on, please press "Enter" on keyboard to start the setup).

```
ICP_DAS MiniOS7 for iPAC-8000E(80MHz) Ver. 2.04 build 007,May 23 2008 14:23:49
OS id=25
SRAM:768K, FLASH MEMORY:512K
[CPU=ICPDAS R2240I]
CPU internal WDT is ENABLED(WDT timeout=0.8 sec)
Serial number= 01 08 99 31 11 00 00 FE

C837_V2.2_UDP>
```

7. Type "ver" to see the current OS version & date.
8. Type "isa_ip *p=" to see the current driver version No. & setting of the controller.

```
C837_V2.2_UDP>ver

ICP_DAS MiniOS7 for iPAC-8000E(80MHz) Ver. 2.04 build 007,May 23 2008 14:23:49
OS id=25
SRAM:768K, FLASH MEMORY:512K
[CPU=ICPDAS R2240I]
CPU internal WDT is ENABLED(WDT timeout=0.8 sec)
Serial number= 01 16 59 31 11 00 00 94

C837_V2.2_UDP>isa_ip *p=

 Driver  : iP-8x47:isa_ip.exe- 1.00,Sep.04,2008
 MiniOS7 : Must use ip_20080530.img
 isa_data.exe -1.00,Sep.04,2008
```

To Upgrade an ISaGRAF Embedded Driver

(We use driver 1.00 as an example)

1. Power off the controller, change the DIP switch on control panel to "Init", and then power it up.
2. Press "**F4**" to auto download the following files and reboot system. (isa_data.exe, autoexec.bat, isa_ip.exe, ip_080530.img)

```
C837_V2.2_UDP>del /y
Total File number is 2, do you really want to delete(y/n)?

C837_V2.2_UDP>LOAD
File will save to 8000:0000
StartAddr-->7000:FFFF
Press ALT_E to download file!
Load file:isa_data.exe[crc=A0A5,0000]
Send file info. total 298 blocks
Block 298
Transfer time is: 14.500000 seconds

C837_V2.2_UDP>isa_data
isa_data.exe - 1.00,Sep.04,2008
Start ...
Finish
```

Wait about 90 sec. to update ISaGRAF system and **DO NOT** Remove the Power!

```
C837_V2.2_UDP>del /y
Total File number is 1, do you really want to delete(y/n)?

C837_V2.2_UDP>LOAD
File will save to 8000:0000
StartAddr-->7000:FFFF
Press ALT_E to download file!
Load file:autoexec.bat[crc=590C,0000]
Send file info. total 1 blocks
Block 1
Transfer time is: 0.109000 seconds
```

```
C837_V2.2_UDP>LOAD
File will save to 8003:0009
StartAddr-->8000:0038
Press ALT_E to download file!
Load file:isa_ip.exe[crc=B7E1,0000]
Send file info. total 765 blocks
Block 765
Transfer time is: 36.797000 seconds
```

```
C837_V2.2_UDP>UPLOAD
Press ALT_E to download file!
Load file:ip_080530.img[crc=191E,0000]
Send file info. total 256 blocks
Block 256
Transfer time is: 12.297000 seconds
CRC16=522F
7000:FFFE=7188
```

3. By now, the controller already reboots and you have updated successfully.

```
C837_V2.2_UDP>bios1
MiniOs7 for C837_2.2 Ver 2.04.007, date=05/30/2008
Checking CRC-16...Please wait...
Erase Flash [F000][F800][FA00][FC00]
Write Flash
[FF]
<<Write Finished>>OK
Wait WDT reset system...
ICP_DAS MiniOS7 for iPAC-8000E(80MHz) Ver. 2.04 build 007,May 23 2008 14:23:49
OS id=25
SRAM:768K, FLASH MEMORY:512K
[CPU=ICPDAS R2240I]
CPU internal WDT is ENABLED(WDT timeout=0.8 sec)
Serial number= 01 08 99 31 11 00 00 FE

C837_V2.2_UDP>
```

4. Press ALT+X to exit "7188xw" or COM1/COM2 of the PC will be occupied.
5. Please change the DIP switch on control panel to "Run", then reboot the iP-8447/8847 controller.

3.12 Backup & Restore an ISaGRAF Project

For archiving purposes you can "Backup" and "Restore" an ISaGRAF project. For example, you may want someone to test your program or email to service@icpdas.com for ICP DAS's ISaGRAF service.

Backing Up an ISaGRAF Project

Open the "ISaGRAF Project Management" window,

1. Select "Tools" from the menu bar, click on "Archive", and then click on "Projects". An "Archive Projects" window will open.
2. You can click on "Browse" to designate where you want to save the ISaGRAF project. (Ex. C:\Demo)
3. Click on the name of the ISaGRAF project you want to backup,
4. and then click on the "Backup" button. The ISaGRAF project file will be backed up to the path (Ex. C:\Demo\example1.pia) you designated.

Note: You can compress the size of the file you have backed up by clicking on the "Compress" checkbox BEFORE you click on the "Backup" button.

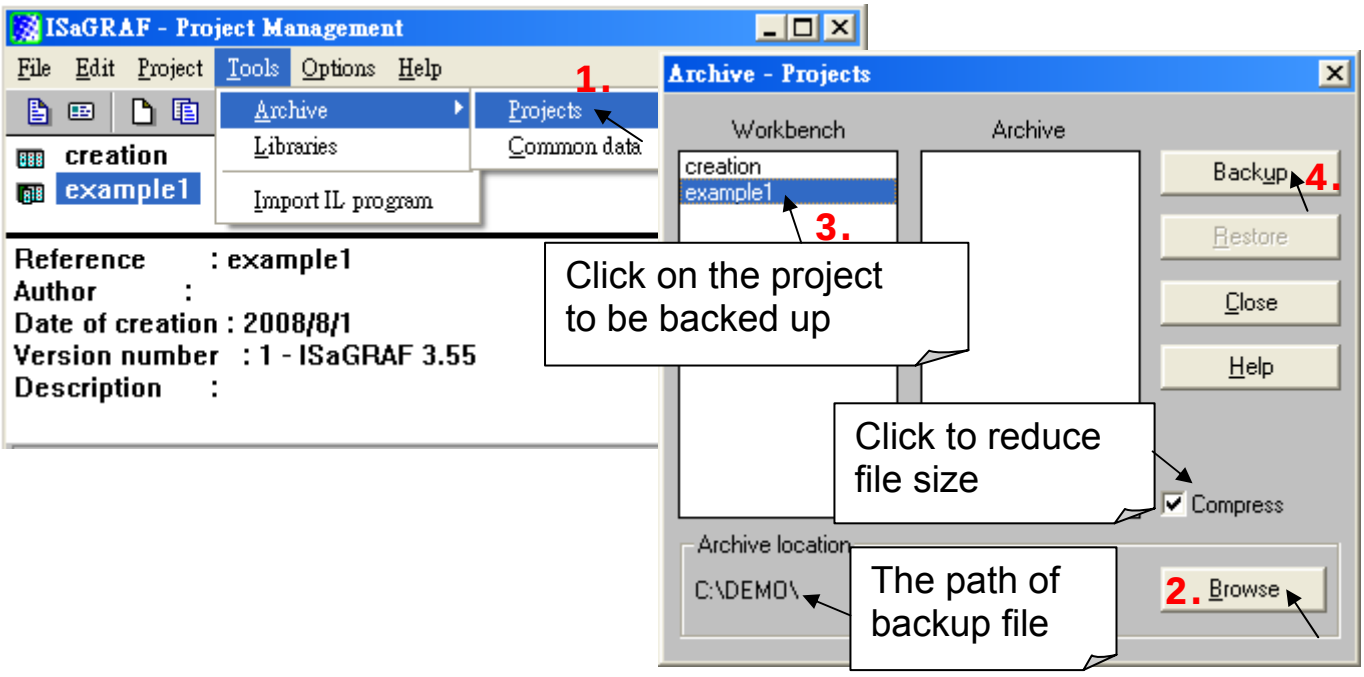

Restoring an ISaGRAF Project

To restore an ISaGRAF project from a backed up file, use the same method as above to access the "Archive Projects" window, ① click on the name of the backed up file from the "Archive" window, then ② click on the "Restore" button. The ISaGRAF project will now be restored to the sub-directory you designated.

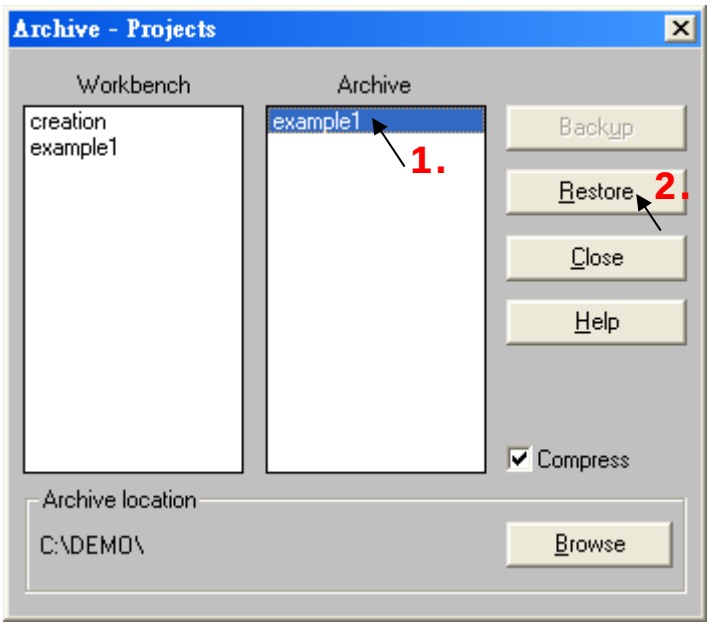

You can now open, edit and download the restored ISaGRAF project file.

3.13 Pin assignment Of the Fbus

Please refer to CD-ROM: \napdos\isagraf\8000\english_manu\ "user_manual_i_8xx7.pdf "

For detailed ISaGRAF User's Manual. The Fbus is listed in Chapter 7.

COM3 (Pin1, 9) : Fbus Networking

3.14 Setting I-7000 and I-87K Remote I/O by DCON Utility

iP-8447/8847 controller system can link up to 64 pcs ICP DAS's Remote I/O modules - "I-7000" and "I-87K" series Remote I/O modules.

TO DO:
Before linking I-7000 and I-87K modules for Remote I/O, you must use DCON Utility to pre-set each I-7000 and I-87K remote module to have a unique address (NET-ID), and set them to the same baud rate as the iP-8x47 controller system.

The DCON Utility is a toolkit that helps user to search the RS-485 I/O network, easily to configure and test the I/O modules. For DCON Utility program and manual please reach to http://www.icpdas.com/products/dcon/introduction.htm. or www.icpdas.com > Products > Software > DCON Utility

NOTE:

1. Make sure the hardware connection is correct.
2. Configure I/O modules with I-87Kn (or RU-87Pn).
3. Using I-87Kn, please search and configure the modules one by one.
4. I-7000: Connect the INIT* to GND and Power on the module.
   I-87K (High Profile): Change the DIP switch of I-87Kn expansion unit or setup the INIT jumper on I-87K module. Lastly, power on the module.

Step 1: Hardware connection

1. The power supply must be DC power between +10V to +30V.
2. Wiring diagram for connecting to I-87K4 + I-87K high profile I/O (one module for each time)

NOTE:
For I-87K4 I/O module, you have to prepare an I-7520R (RS-232 to RS-485) converter. For other wiring diagram please refer to "DCON Utility User's Manual".

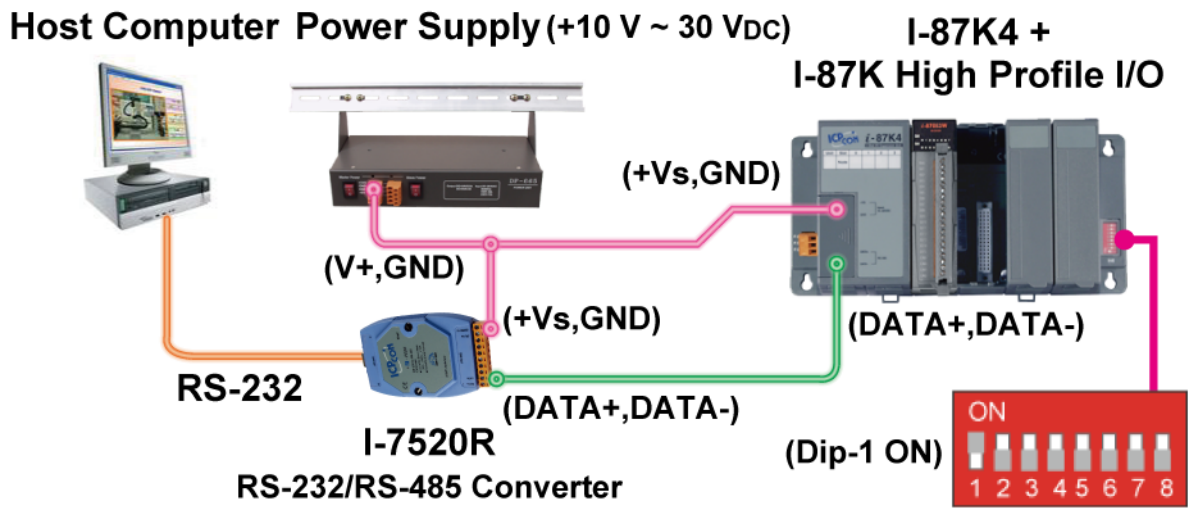

Step 2: Initial I/O module

If the module is a new one, factory have set a default settings (as figure 1) for user's convenient. If you don't know the configuration of the module, please initial the I/O module (as figure 2).

The default state from factory:

I/O Module	I-7000	M-7000	87K series
Address	1	1	1
Baud rate	9600	9600	115200
Checksum	Disabled	Not defined	Disabled
Protocol	DCON Protocol	Modbus Protocol	DCON Protocol

The initial state after initialing:

I/O Module	7000 series (I-7000 and M-7000)	87K series
Address	0	0
Baud rate	9600	115200
Checksum	Disabled	Disabled
Protocol	DCON Protocol	DCON Protocol

★To initial I-7000 module is to wire connect the INIT* to GND and Power on the module. After initial, the module will become initial state.

★To initial I-87K (high profile) module, please switch the DIP switch of I-87K4/5/8/9. For example, switch Dip-1 to "ON" and restart I-87Kn, the Slot1 will setup to initial. **When use I-87K5/9 you must start from the second slot (slot1), CAN NOT use the first slot (slot0).**

Step 3: Select COM Port and Baud Rate to search

On PC, Click on "Start > All Programs > ICPDAS > DCON_Utility > Run DCON_Utility".

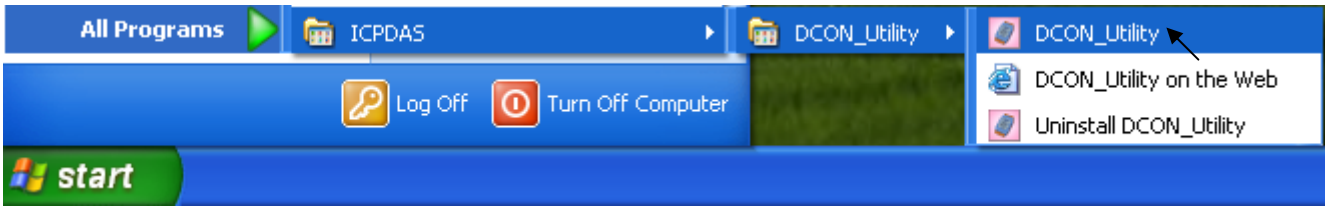

1. Click "COM Port" menu to select the COM Port and Baud Rate to search. You can select multi-Baud Rate, Protocol or Checksum conditions if you do not know the module's setting, but it will spend more time to scan the network. After selection, click "OK".
2. Click "Start Search" icon to begin search module.

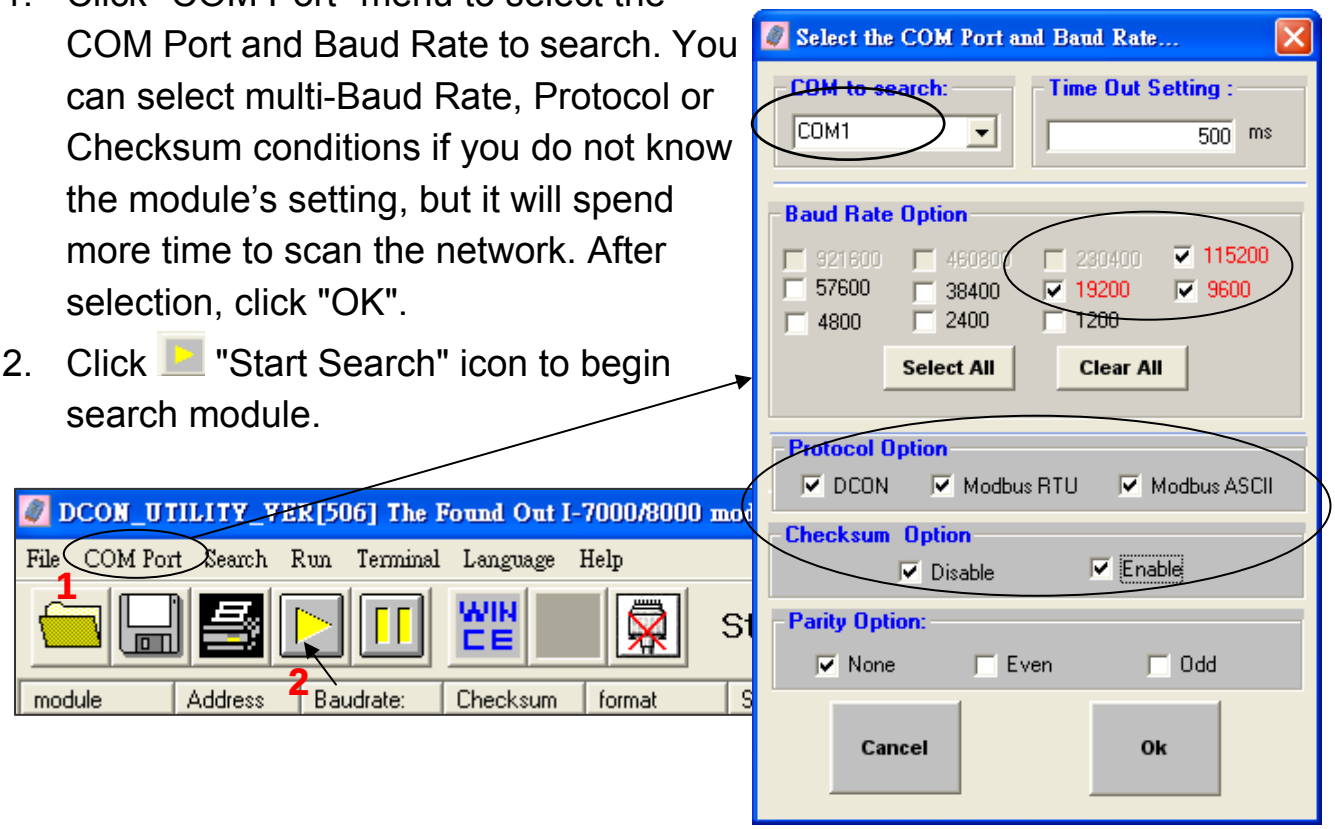

Step 4: Click Searched module ID and give the new configuration

Click when it is searched and double click module number to enter the setup screen.

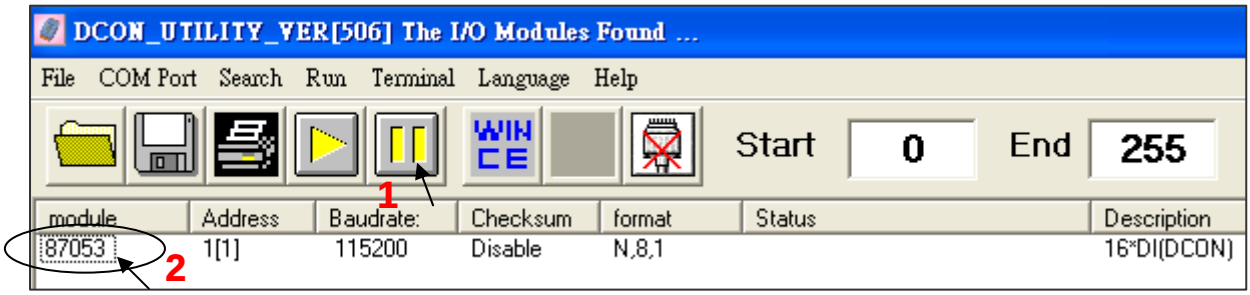

As screen below, you can setup the Address, Baud rate, Checksum, and then click "Setting" to save.

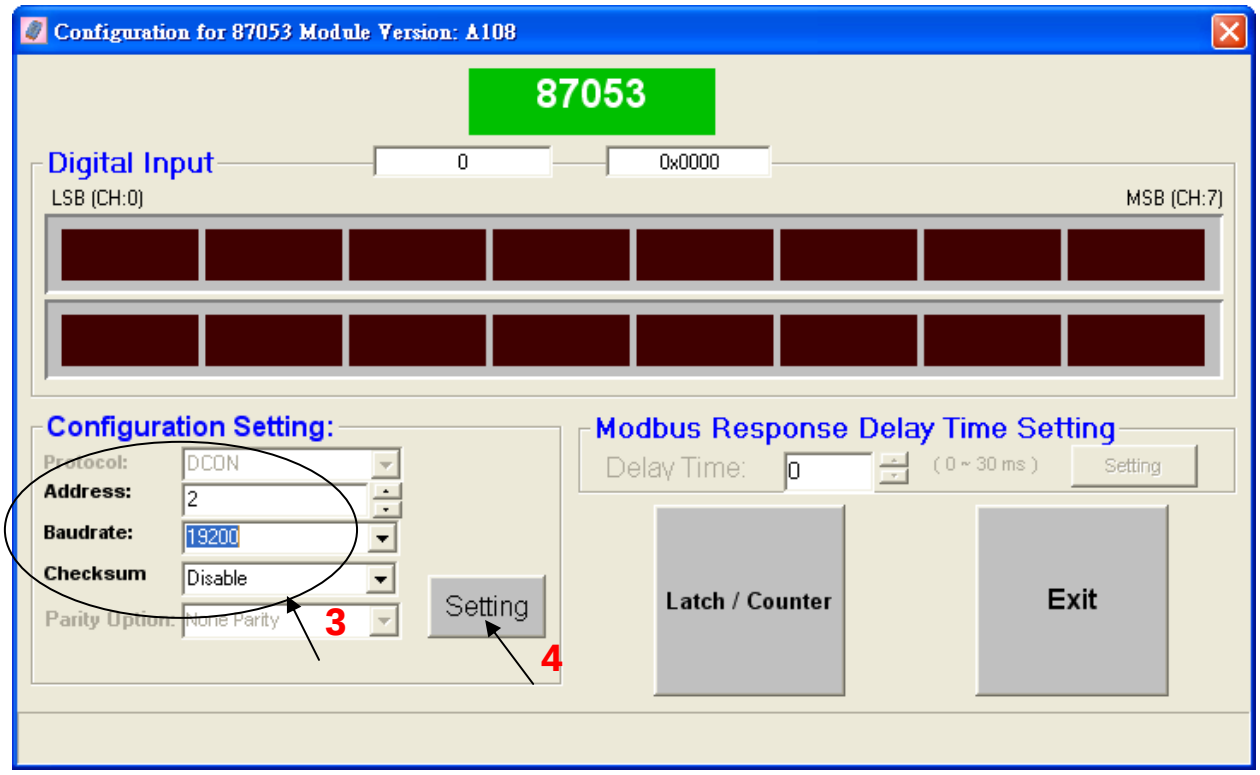

if you didn't connect the INIT, It will show the message window, please connect INIT to GND (Ex. I-7000) or change the DIP switch to "ON" (Ex. I-87Kn), and then click "Setting" button again.

In this screen, you have completed the settings, please disconnect the INIT and reboot the power.

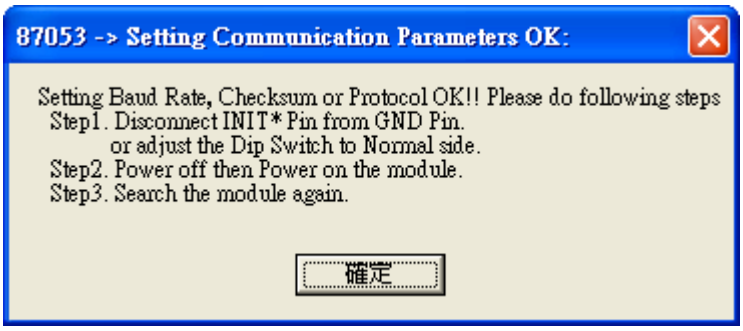

Finally, you can search the module again and check the settings.

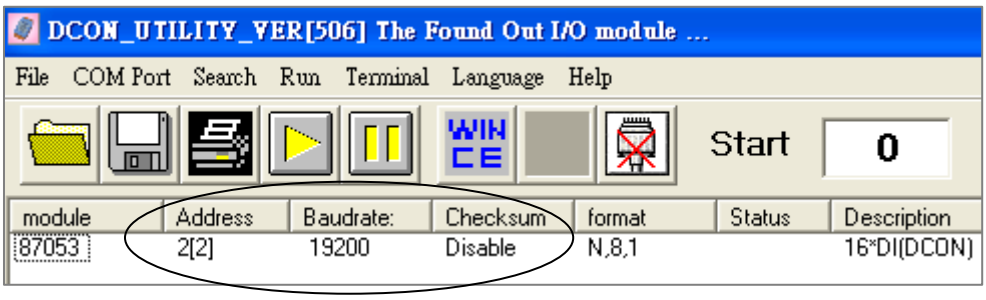

3.15 Linking I-7000 and I-87K Modules for Remote I/O

Please refer to CD-ROM: \napdos\isagraf\8000\english_manu\ "user_manual_i_8xx7.pdf"
For detailed ISaGRAF User's Manual. It is listed in Chapter 6.

You can choose ONE of COM2 (RS-485), COM3 (RS-232/485) to connected.

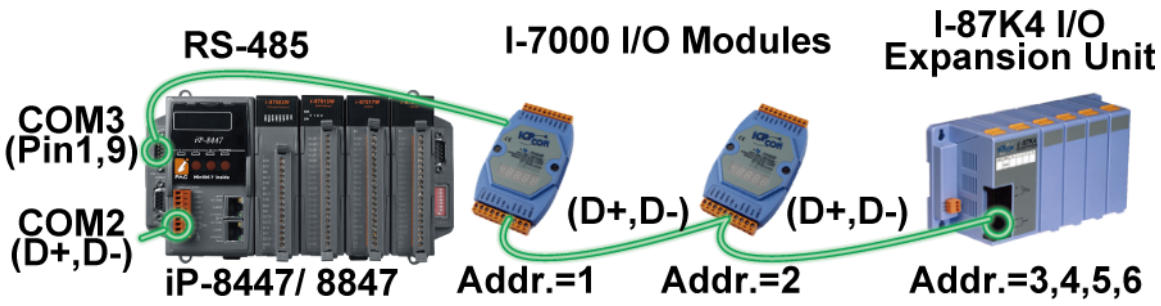

If you choose to utilize the COM4 Port, connect the COM4 Port to the I-7520R's RS-232 Port, and for each I/O modules also connect its "DATA+" to the "DATA+" signal, and the "DATA-" to the "DATA-" signal. As below diagram:

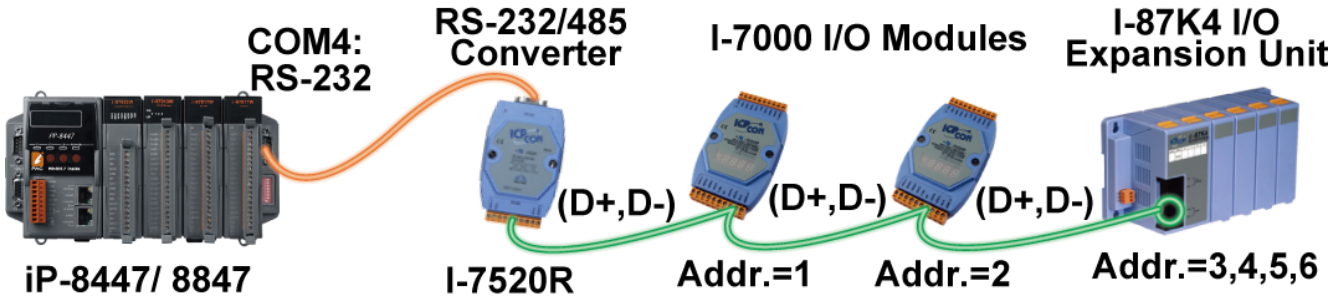

You can link up to 64 I-7000 or I-87K series remote modules to one iP-8447/8847 controller. You must remember to set each I-7000 and I-87K remote module must have a unique address, and be set to the same baud rate as the iP-8447/8847 controller.

For more information regarding setting up and programming an I-7000/I-87K remote module, please refer to ISaGRAF User's Manual Chapter 6 - "Linking To I-7000 and I-87K Modules".

3.16 Creating a Modbus Link with the Controller

Please refer to CD-ROM: \napdos\isagraf\8000\english_manu\ "user_manual_i_8xx7.pdf"
For detailed ISaGRAF User's Manual. It is listed in Chapter 8.

If the COM2/3: RS-485 Port is used for Modbus Master, one iP-8447/8847 can connect to many other devices. Each device on the link must have a unique NET ID (1 ~ 255) address, and communicate at same baud rate settings.

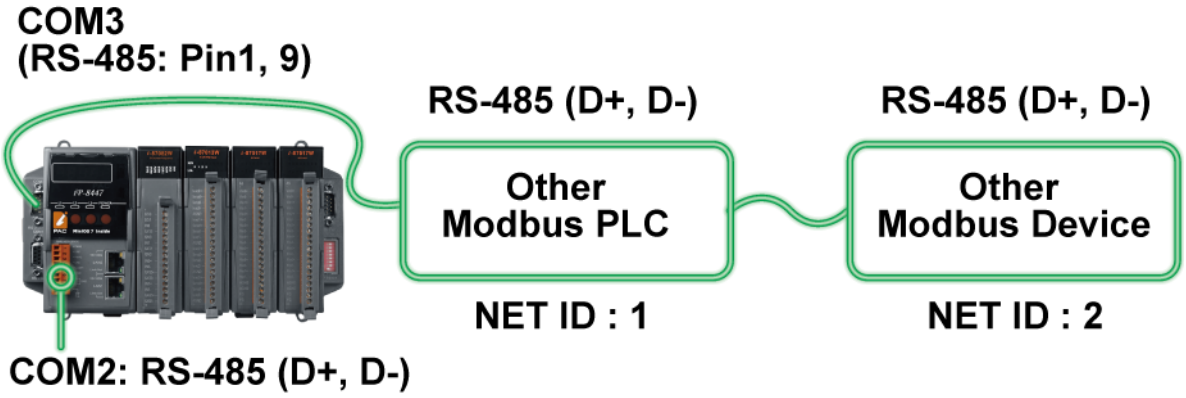

If COM1/3/4 : RS-232 is used, you can only link one iP-8447/8847 to ONE other Modbus device. To use the COM1 as Modbus Master Port, please disable the default Modbus RTU Slave setting in it. Please refer to section 3.10.

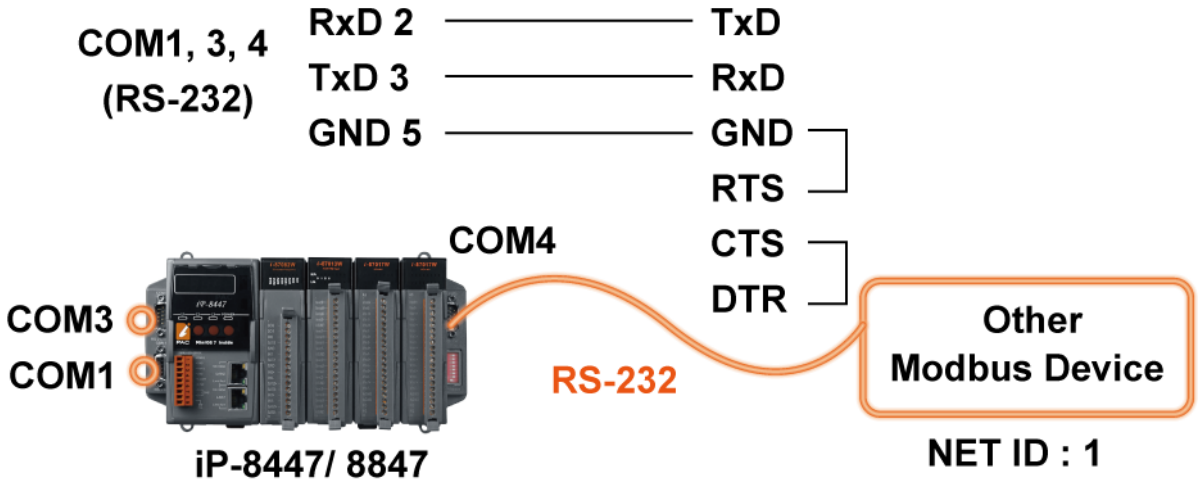

If the COM4 Port of the controller is used to connect to one I-7520R (RS-232/ RS-485 converter), then the controller can network to numerous Modbus devices.

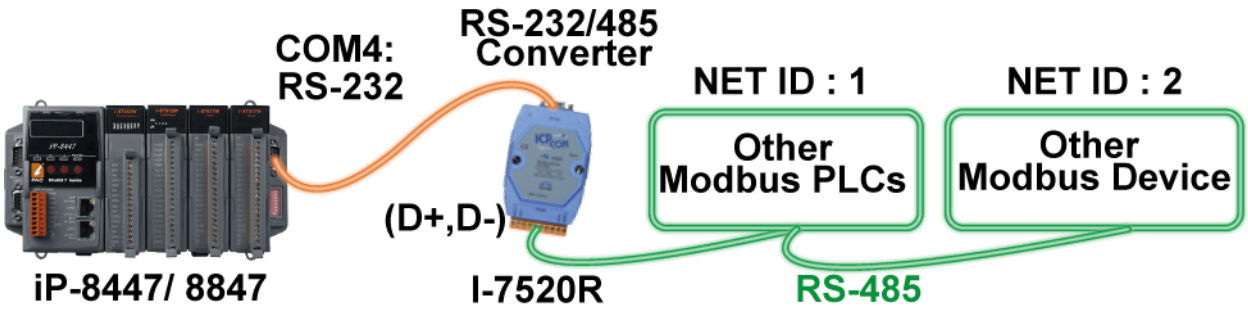

3.17 Linking To an MMI Interface Device

Please refer to CD-ROM: \napdos\isagraf\8000\english_manu\ "user_manual_i_8xx7.pdf"

For more information, please refer to:

1. ISaGRAF User's Manual. It is listed in Section 4.4
2. CD-ROM: \napdos\others\touch\manual\
   "touch200_link_to_i8xx7_7188eg_7188xg.pdf" and
   "touch500_link_to_i8xx7_7188eg_7188xg.pdf"

If you are using any of the "Touch" series of MMI devices (Ex: Touch506L/506S/510T…etc.) to connect to a controller, you can only interface the devices to the COM1 Port on the iP-8447/8847 controller.

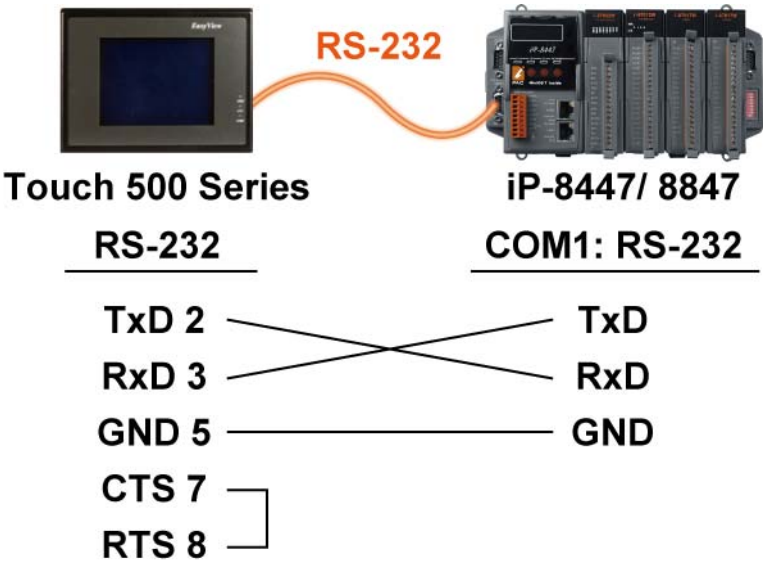

Touch LCD Monitor:
http://www.icpdas.com/products/HMI/touch_lcd/touch_list.htm

3.18 Using N-Port COM

There are some N-Port COM boards that can be used to extend communication ability of the iP-8447/8847 controller. The model No. available is as below.

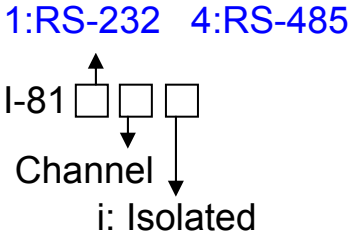

I-8112iW: 2-ch Isolated RS-232 Expansion Module
I-8114W: 4-ch Non-isolated RS-232 Expansion Module
I-8114iW: 4-ch Isolated RS-232 Expansion Module
I-8142iW: 2-ch Isolated RS-485 Expansion Module
I-8144iW: 4-ch Isolated RS-485 Expansion Module

Please refer to:
http://www.icpdas.com/products/PAC/i-8000/8000_IO_modules.htm

Note:
These N-Port COM boards can only be plugged into slot 0 to slot 3. It doesn't support slot 4 to slot 7. That means user can use only COM5 to COM20 of N-Port COM boards.

Some functions can be used to read/write these COM Ports. Please refer to CD-ROM: \napdos\isagraf\8000\english_manu\"user_manual_i_8xx7.pdf" for detailed ISaGRAF User's Manual. They are listed in **Appendix A.4** for "COMOPEN", "COMCLOSE", COMREADY", "COMARY_R" , "COMARY_W", "COMREAD", "COMSTR_W", "COMWRITE" and "COMCLEAR".

Pin assignment:

I-8112iW

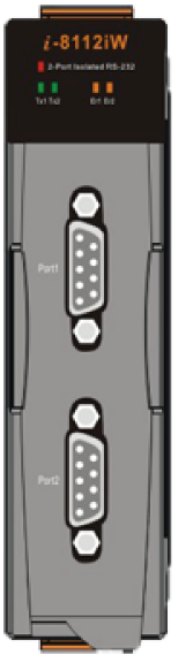

Pin Assignment Name	Terminal No.		Pin Assignment Name
DCD1	01		
RxD1	02	06	DSR1
TxD1	03	07	RTS1
DTR1	04	08	CTS1
GND1	05	09	RI1

DB-9 Male Connector (Port1)

Pin Assignment Name	Terminal No.		Pin Assignment Name
DCD2	01		
RxD2	02	06	DSR2
TxD2	03	07	RTS2
DTR2	04	08	CTS2
GND2	05	09	RI2

DB-9 Male Connector (Port2)

I-8114W

Pin Assignment Name	Terminal No.		Pin Assignment Name
N.C.	01		
DCD3	02	20	RI3
GND	03	21	DTR3
CTS3	04	22	DSR3
RxD3	05	23	RTS3
RI4	06	24	TxD3
DTR4	07	25	DCD4
DSR4	08	26	GND
RTS4	09	27	CTS4
TxD4	10	28	RxD4
DCD2	11	29	RI2
GND	12	30	DTR2
CTS2	13	31	DSR2
RxD2	14	32	RTS2
RI1	15	33	TxD2
DTR1	16	34	DCD1
DSR1	17	35	GND
RTS1	18	36	CTS1
TxD1	19	37	RxD1

37-Pin Female D_Sub Connect (Port1~Port4)

I-8114iW

Pin Assignment Name	Terminal No.		Pin Assignment Name
N.C.	01	20	N.C.
N.C.	02	21	N.C.
GND3	03	22	N.C.
CTS3	04	23	RTS3
RxD3	05	24	TxD3
N.C.	06	25	N.C.
N.C.	07	26	GND4
N.C.	08	27	CTS4
RTS4	09	28	RxD4
TxD4	10	29	N.C.
N.C.	11	30	N.C.
GND2	12	31	N.C.
CTS2	13	32	RTS2
RxD2	14	33	TxD2
N.C.	15	34	N.C.
N.C.	16	35	GND1
N.C.	17	36	N.C.
RTS1	18	37	RxD1
TxD1	19		

37-Pin Female D_Sub Connect (Port1~Port4)

I-8144iW

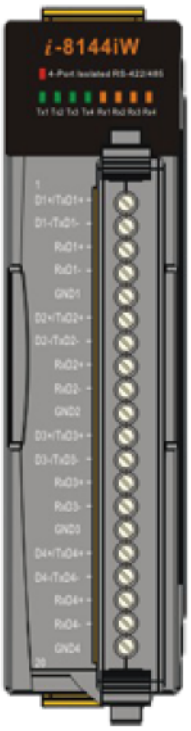

Terminal No.	Pin Assignment Name
01	D1+/TxD1+
02	D1-/TxD1-
03	RxD1+
04	RxD1-
05	GND1
06	D2+/TxD2+
07	D2-/TxD2-
08	RxD2+
09	RxD2-
10	GND2
11	D3+/TxD3+
12	D3-/TxD3-
13	RxD3+
14	RxD3-
15	GND3
16	D4+/TxD4+
17	D4-/TxD4-
18	RxD4+
19	RxD4-
20	GND4

3.19 Pin Assignment of Communication Ports

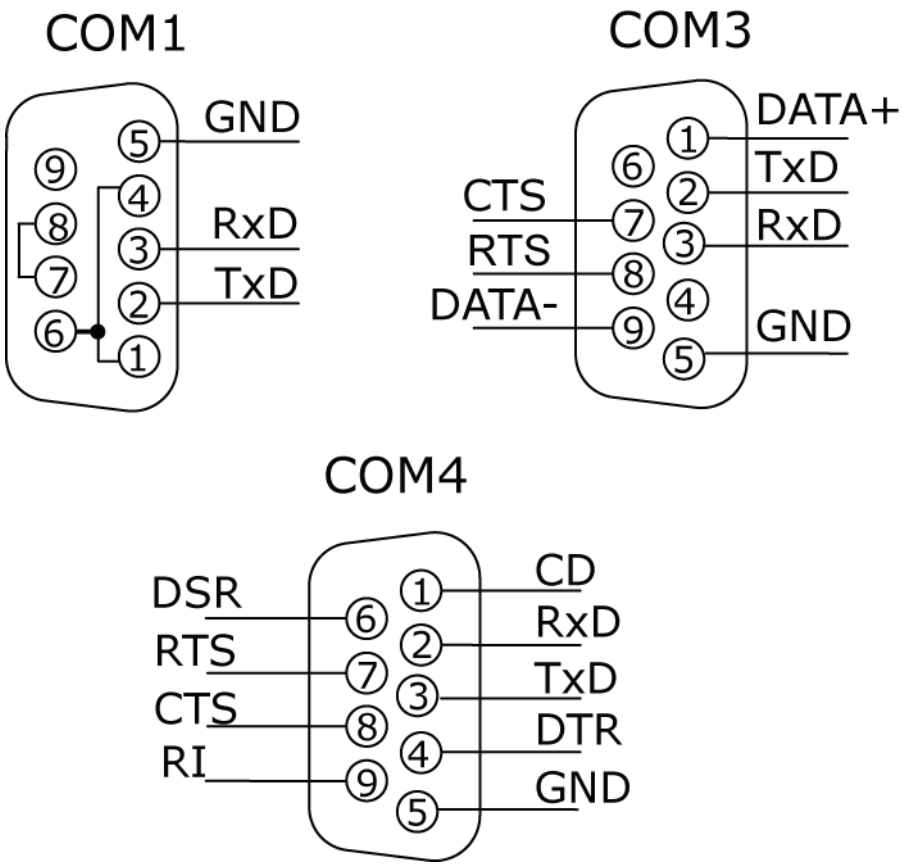

3.20 Dimension

4 Slots:

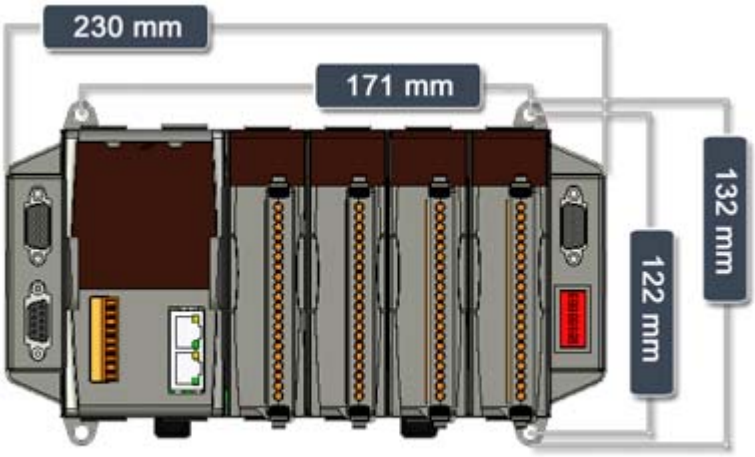

Top View

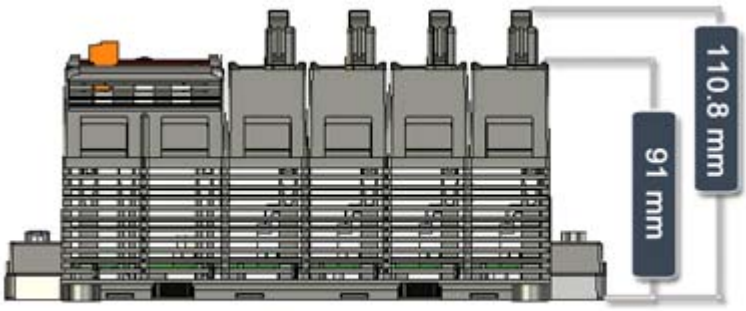

Front View

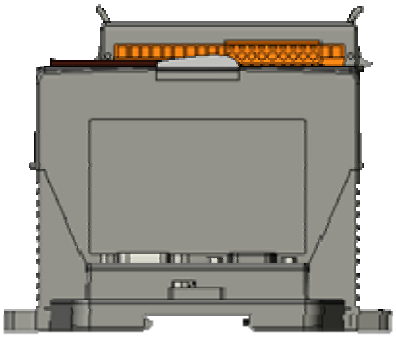

Left Side View

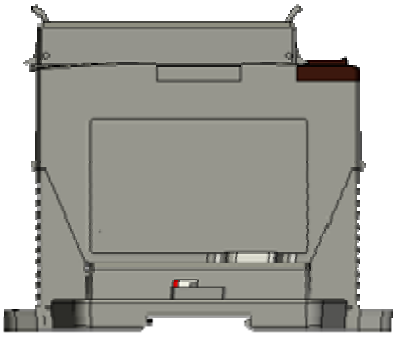

Right Side View

8 Slots:

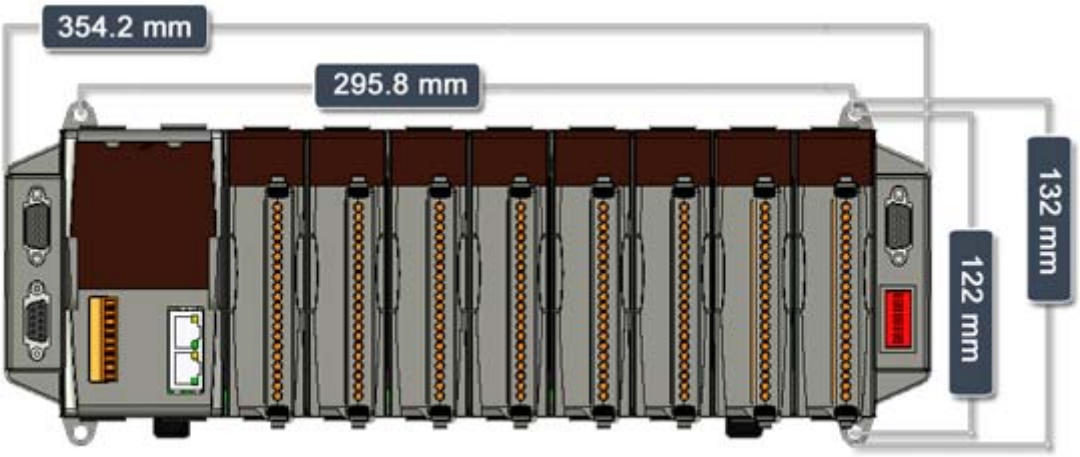

Top View

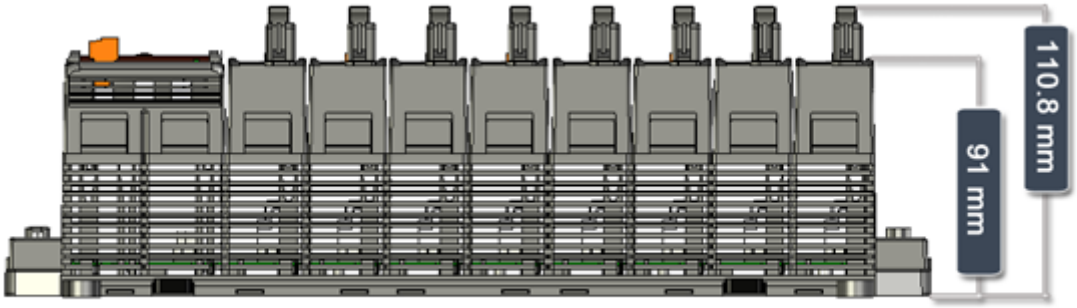

Front View

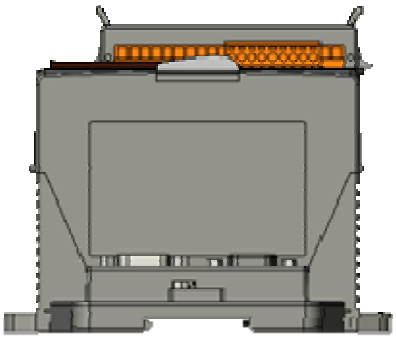

Left Side View

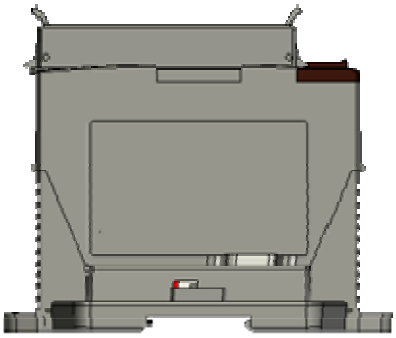

Right Side View

Chapter 4 Frequently Asked Questions

"User Manual of ISaGRAF Embedded Controllers" is an advanced manual for using ISaGRAF as the embedded controller software. Please refer to this manual for more and detail information about how to use the ISaGRAF Embedded Controller (Ex. iP-8447/8847). For manual, please refer to http://www.icpdas.com/products/PAC/i-8000/isagraf.htm or http://www.icpdas.com > Products > Software > ISaGRAF

In this chapter we will list useful applications and their demo programs. Please download programs from CD or website http://www.icpdas.com/faq/isagraf.htm or http://www.icpdas.com > FAQ > ISaGRAF

4.1 English ISaGRAF Ver.3 FAQ

1	Q: How to get counter value built in I-7000 & I-87K Remote I/O modules?
2	Q: How to search I/O boards and declare variables automatically for I-8xx7 controllers?
3	Q: How to build a HMI screen by using ISaGRAF?
4	Q: Can I create my own functions inside ISaGRAF?
5	Q: Can I use more than 32 I/O in my ISaGRAF project if I don't have ISaGRAF-256 or ISaGRAF-L?
6	Q: Can I use ISaGRAF PAC (I-8417/8817/8437/8837, I-7188EG/XG) as a Modbus Master controller to gather data from other Modbus devices?
7	Q: Can I write my own protocol or third-party protocol to apply on ISaGRAF PACs?
8	Q: What is the limitation of program size of I-8417/8817/8437/8837, I-7188EG & I-7188XG?
9	Q: Can not fine I/O boards in the ISaGRAF I/O connection window?
10	Q: I Want to email my ISaGRAF program to someone. How can I archive one ISaGRAF project to a single file?
11	Q: How can I implement motion control in I-8417/8817/8437/8837?
12	Q: My HMI software wants to access to float values and long word values inside the I-8417/8817/8437/8837, 7188EG & 7188XG.How?
13	Q: PWM: Can I generate D/O square pulse up to 500Hz with I-8417/8817/8437/8837, 7188EG & 7188XG controllers? How?
14	Q: Can I use 8K parallel D/I board to get counter input up to 500Hz? How?
15	Q: How to output something at a time interval? For ex. Turn ON at 09:00 ~ 18:00 on Monday to Saturday, while 13:00 ~ 20:00 on Sunday?
16	Q: How to determine a D/I if it has bouncing problem?
17	Q: How to trigger something at some seconds later when one event

	happens?
18	Q:Does the ISaGRAF-256 software have I/O Tag limitation ? Why not using "ISaGRAF-L" Large version?
19	Q: Why my I-8417/8817/8437/8837 or I-7188EG/XG stop running?
20	Q: How to search a variable name in an ISaGRAF project?
21	Q: When closing my ISaGRAF window, it holds for long time. Why?
22	Q: How to Use Proface HMI (Touch panel) to link to I-7188EG/XG, I-8xx7 and WinCon-8x37?
23	Q: How to reduce ISaGRAF code size? How to directly Read/Write ISaGRAF variables by using Network address?
24	Q: How to scale analog input and output of 4 to 20 mA to my engineering format? How to scale analog input and output of 0 to 10 V to my engineering format?
25	Q: How to detect controller Fault?
26	Q: New ISaGRAF retained variable is better than old one.
27	Q: How to link to Modbus ASCII Slave device?
28	Q: How to use multi-port Modbus Master in the WinCon-8337/8737 & WinCon-8036/8336/8736?
29	Q: How to send/receive message from ISaGRAF PAC to remote PCs or Controllers via Ethernet UDP communication?
30	Q: Setting special "range" parameter of temperature input board to get clear "Degree Celsius" or "Degree Fahrenheit" input value. For ex, "1535" means 15.35 degree.
31	Q: Setting a special "ADR_" parameter of remote I-7000 & I-87xxx temperature input module to get clear “Degree Celsius” or “Degree Fahrenheit” input value. For ex, “8754” means 87.54 degree.
32	Q: How to access to ISaGRAF variables as array? (A demo program of sending string to COM2 or COM3 when alarm 1 to 8 happens)
33	Q: Setting Up More Modbus RTU Slave Ports in WinCon ISaGRAF PACs
34	Q: Compiling error result in different ISaGRAF version?
35	Q: Slow down ISaGRAF driver speed to work better with Indusoft software in W-8036/8336/8736 & W-8046/8346/8746?
36	Q: Redundancy Solution in WinCon
37	Q: I-7188EG/XG support remotely downloads via Modem Link
38	Q: Setting I-7188EG/XG 's COM3 as Modbus RTU Slave Port
39	Q: ISaGRAF version 3.4 & 3.5 Now Supporting "Variable Array" !!!
40	Q: Setting I-8437/I-8837/I-8437-80/I-8837-80's COM3 as Modbus RTU Slave Port
41	Q: How to connect PC/HMI to a Redundancy system with a single IP address?

42	Q: How to use WinCon connecting to Ethernet I/O? The I/O scan rate is about 30 to 40 ms for 3000 to 6000 I/O channels.
43	Q: How to setup WinCon-8xx7 as TCP/IP Client to communicate to PC or other TCP/IP Server device? Or WinCon automatically report data to PC via TCP/IP?
44	Q: WinCon-8xx7/8xx6 automatically report data to PC/InduSoft or PC/HMI?
45	Q: ISaGRAF PACs display message to EKAN Modview LED
46	Q: How to Write 16-bits to Modbus RTU devices by Modbus function call No. 6 ?
47	Q: How to Read or Write Floating Point Value to Modbus RTU Slave device?
48	Q: How to use iPAC-8x47 and Win-8xx7/8xx6 to control FRnet I/O?
49	Q: Setting a special "CODE_" parameter of "MBUS_R" & "MBUS_R1" to get a clear "Degree Celsius" or "Degree Fahrenheit" input value of M-7000 temperature module . For ex, "3012" means 30.12 degree.
50	Q: How to connect an ISaGRAF PAC to M-7000 Remote I/O?
51	Q: VB .NET 2005 Demo program using Modbus TCP/IP protocol to control ISaGRAF PACs
52	Q: VB 6.0 Demo program using Modbus TCP/IP protocol to control ISaGRAF PACs
53	Q: Performance Comparison Table of ISaGRAF PACs
54	Q: iPAC-8x47 and µPAC-7186EG support Data Logger function
55	Q: How to connect I-7018z to get 6-ch of 4 to 20 mA input and 4-ch of Thermo-couple temperature input? And also display the value on PC by VB 6.0 program?
56	Q: How to do periodic operation in ISaGRAF PACs?
57	Q: How to record I-8017H 's Ch.1 to Ch.4 voltage input in a user allocated RAM memory in the WinCon-8xx7 ? The sampling time is one record every 0.01 second. The record period is 1 to 10 minutes. Then PC can download this record and display it as a trend curve diagram by M.S. Excel.
58	Q: How to record I-8017H 's Ch.1 to Ch.4 voltage input in S256/512 in I-8437-80 or I-8837-80 ? The sampling time is one record every 0.05 second. The record period is 1 to 10 minutes. Then PC can download this record and display it as a trend curve diagram by M.S. Excel.
59	Q: Some skill to operate RS-232/422/485 serial COM Port by COM functions
60	Q: How to read/write file data in WinCon?
61	Q: How to connect RS-485 remote I-7000 and I-87K I/O modules in I-8xx7 , I-7188EG/XG and WinCon-8xx7 controller ? How to program RS-485 remote I-7017RC, I-87017RC and I-7018Z?
62	Q: How to setup a redundant system with Ethernet I/O?
63	Q: Why my RS-485 remote I-7000 and I-87K Output module 's host watchdog

	function doesn't work to reset its output channels to safe output value while the RS-485 communication cable is broken ?
65	Q: ICP DAS Release Stable and Cost-effective Data Acquisition Auto-Report System. (VC++ 6.0 and VB 6.0 and ISaGRAF demo program are available)
66	Q: How to process the Integer or Real value coming from the RS-232/ RS-485 device? Like the device of Bar-Code reader or RS-232 weight meter.
67	Q: How to send email with attached file by WinCon-8437/8747?
68	Q: Why the W-8xx7 or I-8xx7 or I-7188EG or I-7188XG always reset? How to fix it?
69	Q: Why my PC can not run "ftp" to connect W-8347 or W-8747?
70	Q: How to do Time Synchronization and record state of many ISaGRAF PAC?
71	Q: Application: Record 10-Ch. temperature value into a file in W-8xx7 every minute. When 24 hour recording is finished, send this record file by email every day.
72	Q: Application : Record Voltage/Current input by W-8xx7 every 20 ms for 1 to 10 minutes. Then send this record file by email.
73	Q: Why does the I-7017 or I-87017 's Current Input reading value become double or incorrect ?
74	Q: How to use ISaGRAF New Retain Variable? What is its advantage?
75	Q: Why my ISaGRAF project can not connect Modbus Slave device correctly?
76	Q: How to send e-mail with attached file by µPAC-7186EG?
77	Q: How to send e-mail with attached file by iPAC-8x47?
78	Application: Record 10-ch. temperature values into a file in iPAC-8x47 every 10 mimutes. When 24 hour recording is finished, send this record file by e-mail every day.
79	Application: Record Voltage/Current input in iPAC-8x47 every 50 ms for 1 ~ 5 mimutes. Then send this record file by e-mail.
80	Application: Record 10-ch. temperature values into a file in µPAC-7186EG every 10 mimutes. When 24 hour recording is finished, send this record file by e-mail every day.
81	Q: How to measure +/-150 VDC in ISaGRAF PACs plus the I-87017W-A5 I/O card?
82	Q: An easy way to program the fast FRnet Remote I/O modules
83	Q: How to set I-8x37, I-8x37-80, I-7188EG and µPAC-7186EG 's TCP recycling time ?
84	Q: Application: A Cost Effective and Hot-Swap Redundancy System by µPAC-7186EG or I-8437-80 plus RU-87P4/8
86	Q: The WinCon-8347/8747, µPAC-7186EG and iP-8437/8837 connecting

	one or several I-7530 to link many CAN or CANopen devices and sensors.
87	Q: What does it mean and how to fix it when the 7-segment LED shows error messages of Err00, Err02, Err03, Err90 or E.0001 after booting the PAC?
88	Q: Function Modifications: The W-8347/8747, µPAC-7186EG, I-8x37-80, I-8xx7 and I-7188EG/XG with S256/512 and X607/608 no longer support old retain method, please change to use the better new retain method to retain variables
89	Q: Why my µPAC-7186EG unable to renew the driver and ISaGRAF application?
90	Q: How to use I-7017Z module in ISaGRAF PAC?
91	Q: How to use ISaGRAF PAC plus I-87089 with the VW sensor Master card to measure the Vibration Wire frequency to calculate the stress of constructions ?
92	Q: Setting µPAC-7186EG's and I-7188EG/XG 's COM3 or COM2 as Modbus RTU Slave Port
93	Q: New Hot-Swap And Redundant Solution For The WinCon-8347/8747
94	Q: How To Update The WinCon-8347/8747 's OS ?
95	Q: The Wincon-8xx7 Supports Max. 32 Modbus TCP/IP Connections Since Its Driver Version 4.03
96	Q: Release Two C-Function-Blocks To Read Max. 24 Words Or 384 Bits From Modbus RTU/ASCII Devices
97	Q: How to modify the IP, NET-ID and Modbus RTU Slave Port setting of the W-8347/8747 by an USB pen drive (without Mouse and VGA) ?

4.2 How to Detect the Status of "Hot Swap" for I-87K

By using I-87K (High Profiles) modules, iP-8447/8847 can support "Hot Swap" function. This feature allows users to plug or unplug modules without shutting down the power. And you could check current I/O status by ISaGRAF Workbench. First click the "I/O connection" icon to bring up the window; you should connect the I/O boards on Slot 0 ~ 7 which you want to use and then double click any blank item (after #8 preferred), As diagram below, please select "io_state" in the “Select board/equipment” window to add it to the list and click OK.

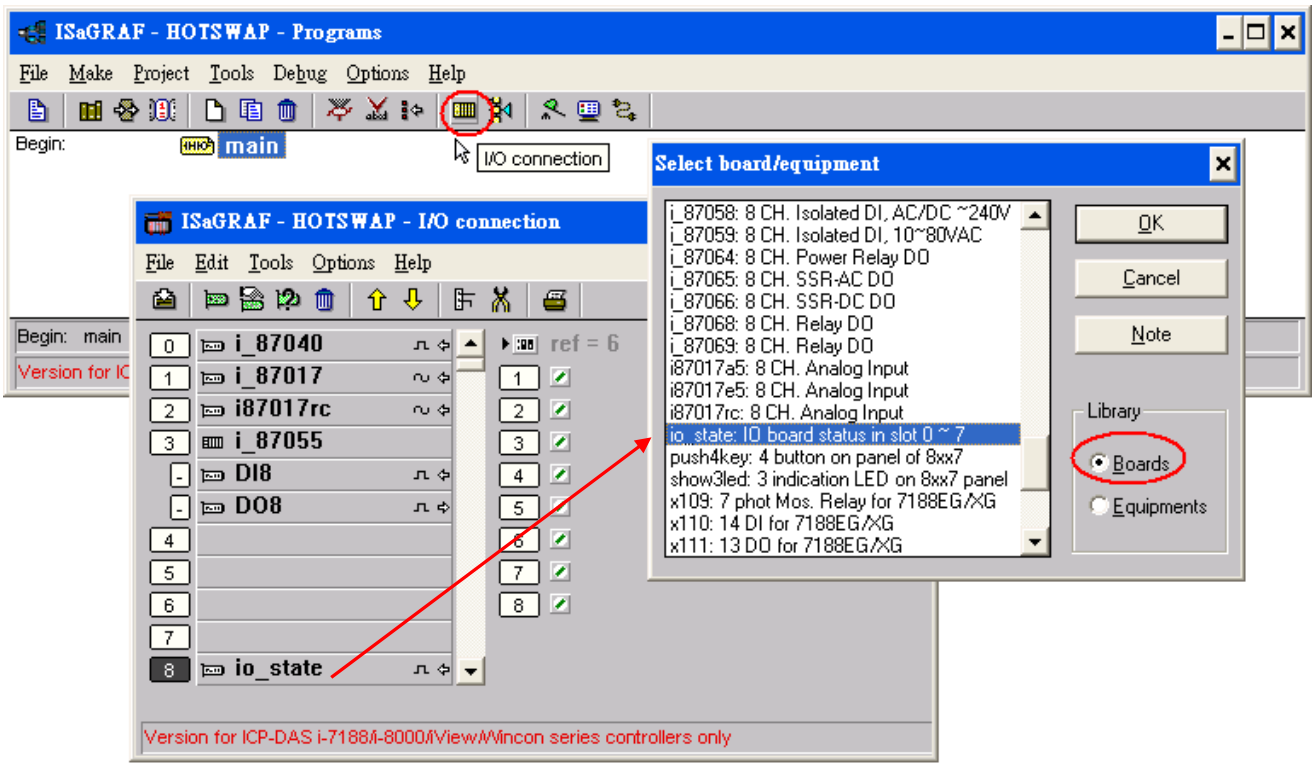

Now, "io_state" will display the operating status of modules on slot 0 ~ 7. If the I/O card is functioning normally, a message “True” will be displayed. If there is something wrong or no I/O card currently in use, a message "False" will be displayed. Show as below:

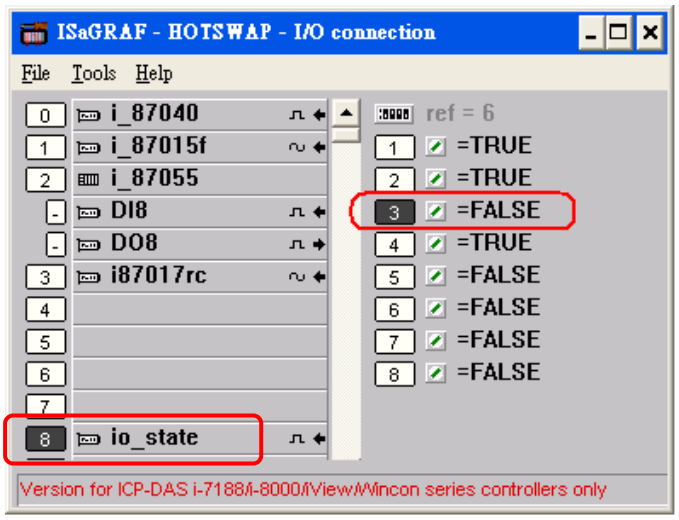

When you plug an I-87K (High Profile) I/O module, if it is not functioning normally, an error message will be immediately displayed on the front panel (S-MMI). Messages for I-87K operating status are shown as below:

-Sn-: indicates the I-87K (High Profile) module is functioning normally, n (0 ~ 7) corresponds to the slot # 0 ~ 7

Sn-Er: indicates the I-87K (High Profile) module is not functioning normally, n (0 ~ 7) corresponds to the slot # 0 ~ 7

4.3 How to Detect the Status of Dual Battery

Attention: Please power off your iP-8447/8847 before replacing the battery; it may cause permanent damage if the battery accidently touches other metal electronic parts.

iP-8447/iP-8847 equips a 512 KB SRAM with Dual battery design to ensure the persistence of data even in the case of total power loss. Additional S512/256 chip battery backup SRAM is no longer required.

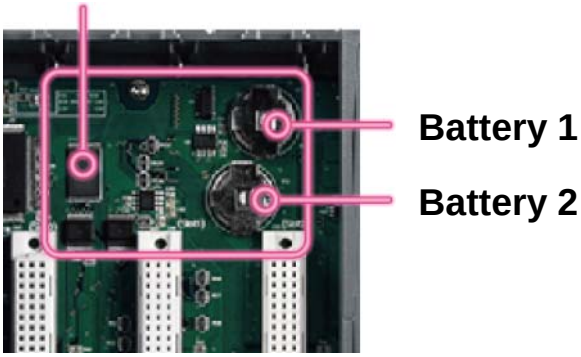

The Dual battery provides 512 KB SRAM with continuous power supply to retain the data stored within up to 5 years; this dual battery design allows for the replacement of one of the batteries without losing power and thus not losing the data stored in the memory.
(Warning: Please do not take out these two batteries at the same time or the data will be lost during this period of non-power.)

There are two ways to retrieve Dual battery power status on iP-8447/8847:

A. Check the current power status when the system boots up

① Power off your iP-8447/8847
② Press and hold the first right button (SET) on the front panel and then power on your iP-8447/8847 (keep on pressing and holding the SET button when you power on your controller)

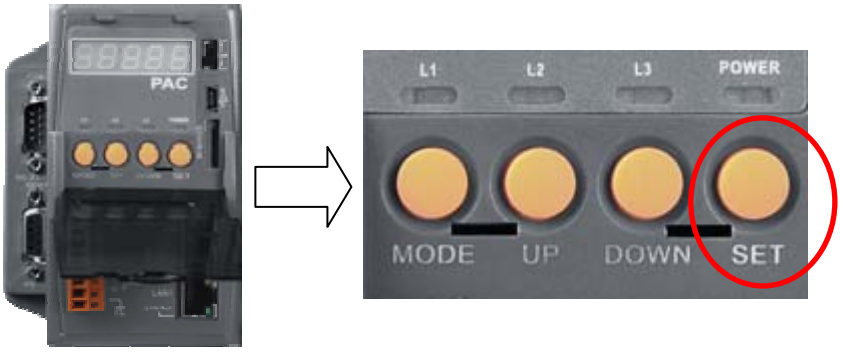

S-MMI will display the power status of Battery 1(BA.1) and Battery 2 (BA.2).
"-BA1.- " , "-BA2.- ": indicates Full power status; it does not require immediate battery replacement.
"BA1.Er", "BA2.Er": indicates Low power status; please replace the battery as soon as possible.

B. Query the power status when the system is running

You can query the battery power status through SCADA/HMI by Modbus protocol at No. = 9992 & 9993. Modbus 9992: query the power status of Battery 1 ; Modbus 9993: query the power status of Battery 2.

Status "99": indicates Full power status; it does not require immediate battery replacement ; Status "0": indicates Low power status; please replace the battery as soon as possible.

Appendix

A : 10-ch Thermocouple Input Module

10-ch Thermocouple input module is a brand new designed module different from the 8-ch normal module in the industrial area. ICP DAS supply I-7018Z and I-87018Z of 10-ch Thermocouple Input Module and they all meet the RoHS Standard. They are the best Thermocouple Input Module choices for iPAC-8xx7 and I-8xx7.

A.1 : I-7018Z

A.2 : I-87018Z

A.3 : Advantages

1. It is special designed for thermocouple inputs. The innovative design makes the thermocouple measurement more accurate than the previous design.
2. It supports voltage and current inputs. The voltage input ranges can be ±15mV to ±2.5V. The current input ranges can be 4 to 20mA, 0 to 20mA, and ± 20mA.
3. Up to 10 analog inputs of different types can connected to one module.
4. Up to 240 V_{rms} over voltage protection is provided.
5. It features per-channel open wire detection for thermocouple and 4 to 20mA inputs

For more details, please visit the web site listed below:
I-7018Z: http://www.icpdas.com/products/Remote_IO/i-7000/i-7018z.htm
I-87018Z: http://www.icpdas.com/products/Remote_IO/i-87k/i-87018z.htm

B : RU-87P1/2/4/8

Introduction

RU-87Pn (n: means 1/2/4/8 slots) series is a remote intelligent I/O expansion unit that used to expand I-87K series I/O modules over the RS-485 for industrial monitoring and controlling applications. There are more than 30 I/O modules supported with the unit, including analog input/output, digital input/output, and counter/frequency I/O modules. RU-87Pn is the best choice for ISaGRAF PACs (iP-8x47, I-8xx7, µPAC-7186EG, I-7188EG/XG, W-8xx7) connecting to I-87K Remote I/O (only support High Profile) modules.

RU-87Pn is designed to be used in harsh and noisy environment, so the hardware is manufactured with wide power input range (10 ~ 30 VDC) and operating temperature (-25 ~ +75 ℃). It simplifies installation and maintenance of I/O modules with hot swappable and auto configuration, fault and error detection, dual watchdog, programmable power on and safe values.

Various software development kits (SDK) and demos are provided, such as DLL, ActiveX, Labview driver, Indusoft driver, Linux driver, OPC Server, etc. The ISaGRAF PACs can connect to the RU-87Pn directly. The I-87K series I/O modules plugged in the RU-87Pn can be easily integrated into variant software system.

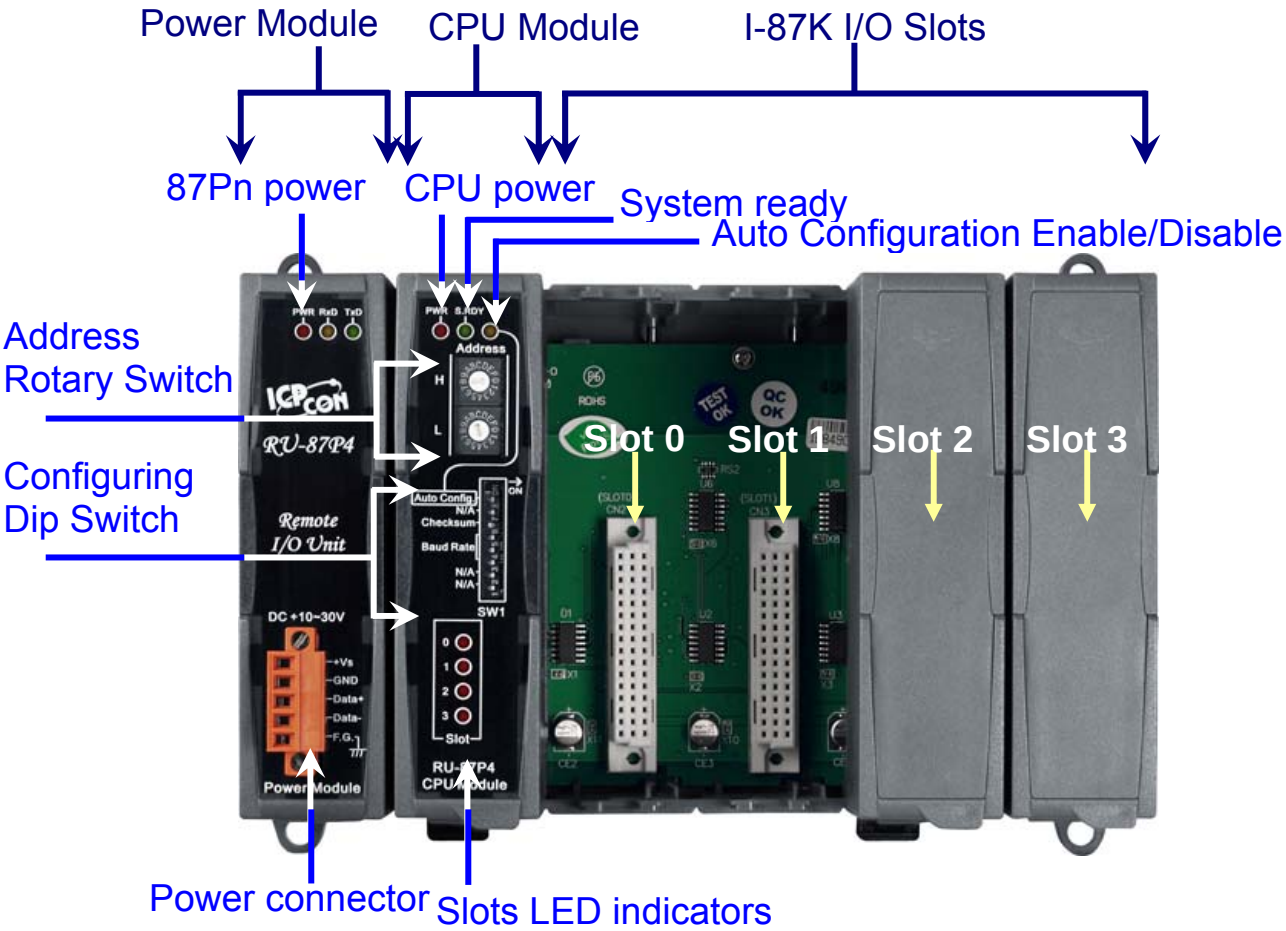

Fig. 1 RU-87P4

Features

Hot Swap

The RU-87Pn doesn't need to shut down its power to replace or plug I-87K I/O modules. Therefore, the whole system can keep operating without any interruption.

Auto-Configuration

Configurations of I-87K I/O modules can be pre configured and stored in the nonvolatile memory of the RU-87Pn. When the RU-87Pn is power on or an I-87K I/O module is plug in, the RU-87Pn automatically check and restore these configurations to each I-87K I/O modules on it.

Easy Duplicate System

Using the DCON Utility, you can easily make a backup of the I-87K module configurations and write to another RU-87Pn. This design can easily and quickly duplicate many RU-87Pn.

Easy Maintenance and Diagnostic

The basic configurations (includes station number, baud rate) are set by the rotary and DIP switch. The operator can use only one screwdriver to set the RU-87Pn. And there are several LED status indicators to show whether I-87K modules are configured and work properly.

If one I-87K module is damaged, the operator just need to get one good I-87K module with the same item number to replace the damaged one. And then check the LED indicators to know whether the replacement is performed correctly. The switch and LED design makes it easy for maintenance. There is no PC and Notebook needed.

Fully Software Support

The variant development kits and free charge software utility:

- **DCON Utility: for configuration**
- **OPC Servers**
- **EZ Data Logger**
- **Support Variant Software Develop Toolkits**
  Free DLL, ActiveX, Labview driver, Indusoft driver, DasyLab driver, Linux driver
- **ISaGRAF PACs can connect to the RU-87Pn directly**